KeepRite® REFRIGERATION

KQH-Line Condensing Units

PRODUCT DATA & SPECIFICATIONS

Bulletin K40-KQH-PDS-9
Part # 1090654

PRODUCT SUPPORT
web: **k-rp.com/kqh**
email: **smcu@k-rp.com**
call: **1-844-893-3222 x521**
scan:

Outdoor Air-Cooled
Hermetic Condensing Units

1/2 to 5 HP -
High, Medium, Extended Medium and
Low Temperature Refrigeration

60 Hz

QUIETUNIT
REFRIGERATION DUTY CONDENSING UNITS

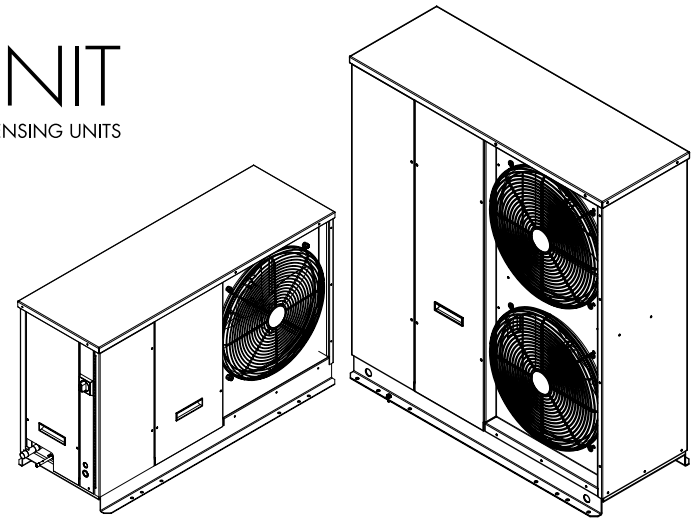

CONTENTS

	Page
Nomenclature	2
Features and Options	2 - 3
Capacity Data (Imperial and *Metric*)	3 - 9
Electrical Data	10
Dimensional Data	11
Dimensional Data - Optional Wind Guard	12
Specifications	13
Annual Walk-In Energy Factor (AWEF) Ratings	14
Sound Data	14
Wiring Diagrams	15 - 17
Optional Wall Mount	18
Project Information	19
Product Support Resources	BACK

NOMENCLATURE

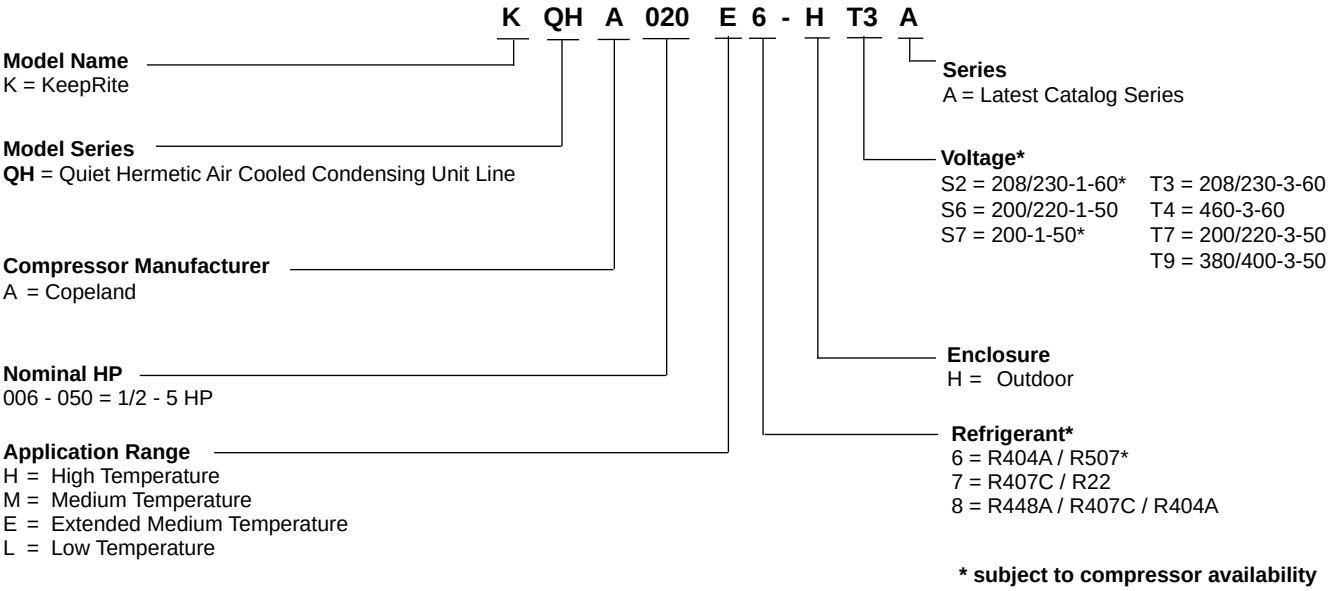

*** subject to compressor availability**

STANDARD FEATURES

- Hermetic compressors
- Heavy duty weatherproof construction
- Painted cabinet • Gold Coat™ fins
- High efficiency enhanced tube and fin condenser design
- High efficiency variable speed EC motor as head pressure control
- Receiver with fusible plug and liquid shut-off valve
- Fixed high and low pressure control • Crankcase heater

OPTIONAL ACCESSORIES

- Liquid line filter drier and sight glass
- Suction accumulator
- Sealed suction filter
- Heated and insulated receiver - required in ambients below 10°F
- Insulated suction line
- Non-fused disconnect switch
- Mechanical time clock
- Time delay relay
- **Sound insulated compressor compartment** *
- Wall mount kit
- QuickVac evacuation and refrigerant recovery valves

* see sound data table on page 14

OPTIONAL FEATURE PACKAGES
(Factory Mounted)

Package A:
- Standard Features (see pg. 2)

Package B:
- Standard Features (see pg. 2)
- *Plus* Sealed Liquid Line Filter Drier & Sight Glass

Package C:
- Standard Features (see pg. 2)
- *Plus* Sealed Liquid Line Filter Drier & Sight Glass
- *Plus* Suction Accumulator
- *Plus* Mechanical Time Clock

Package D:
- Standard Features (see pg. 2)
- *Plus* Sealed Liquid Line Filter Drier & Sight Glass
- *Plus* Heated and Insulated Receiver (required in ambients below 10°F)

Package E:
- Standard Features (see pg. 2)
- *Plus* Sealed Liquid Line Filter Drier & Sight Glass
- *Plus* Heated and Insulated Receiver (required in ambients below 10°F)
- *Plus* Suction Accumulator
- *Plus* Mechanical Time Clock

Package F:
- Standard Features (see pg. 2)
- *Plus* Sealed Liquid Line Filter Drier & Sight Glass
- *Plus* Mechanical Time Clock

Package G:
- Standard Features (see pg. 2)
- *Plus* Sealed Liquid Line Filter Drier & Sight Glass
- *Plus* Heated and Insulated Receiver (required in ambients below 10°F)
- *Plus* Mechanical Time Clock

Package H:
- Standard Features (see pg. 2)
- *Plus* Sealed Liquid Line Filter Drier & Sight Glass
- *Plus* Suction Accumulator
- *Plus* Heated and Insulated Receiver (required in ambients below 10°F)

Package J:
- Standard Features (see pg. 2)
- *Plus* Sealed Liquid Line Filter Drier & Sight Glass
- *Plus* Compressor Compartment Sound Insulation

Package K:
- Standard Features (see pg. 2)
- *Plus* Sealed Liquid Line Filter Drier & Sight Glass
- *Plus* Compressor Compartment Sound Insulation
- *Plus* Mechanical Time Clock

CAPACITY DATA - R448A
MEDIUM TEMPERATURE

MODEL	SATURATED SUCTION TEMPERATURE		CAPACITY BTU/H *(WATTS)* R448A AMBIENT TEMPERATURE °F *(°C)*													
KQH	° F	° C	80	*(26.6)*	85	*(29.4)*	90	*(32.2)*	95	*(35.0)*	100	*(37.8)*	105	*(40.6)*	110	*(43.3)*
	30	*(-1.1)*	8220	*(2410)*	7900	*(2320)*	7570	*(2220)*	7260	*(2130)*	6930	*(2030)*	6620	*(1940)*	6300	*(1850)*
	25	*(-3.9)*	7320	*(2150)*	7040	*(2060)*	6740	*(1980)*	6450	*(1890)*	6160	*(1810)*	5880	*(1720)*	5590	*(1640)*
KQHA006M8	20	*(-6.7)*	6490	*(1900)*	6230	*(1830)*	5970	*(1750)*	5710	*(1670)*	5460	*(1600)*	5210	*(1530)*	4940	*(1450)*
	15	*(-9.4)*	5730	*(1680)*	5500	*(1610)*	5270	*(1540)*	5040	*(1480)*	4820	*(1410)*	4590	*(1350)*	4360	*(1280)*
Compressor	10	*(-12.2)*	5050	*(1480)*	4840	*(1420)*	4630	*(1360)*	4430	*(1300)*	4230	*(1240)*	4020	*(1180)*	3820	*(1120)*
Model	5	*(-15.0)*	4420	*(1300)*	4230	*(1240)*	4050	*(1190)*	3890	*(1140)*	3700	*(1080)*	3520	*(1030)*	3340	*(980)*
RST45C1E	0	*(-17.8)*	3860	*(1130)*	3700	*(1080)*	3540	*(1040)*	3380	*(990)*	3220	*(940)*	3070	*(900)*	2900	*(850)*
	-5	*(-20.6)*	3350	*(980)*	3210	*(940)*	3080	*(900)*	2930	*(860)*	2790	*(820)*	2660	*(780)*	2510	*(740)*
	-10	*(-23.3)*	2900	*(850)*	2780	*(810)*	2660	*(780)*	2540	*(740)*	2400	*(700)*	2280	*(670)*	2160	*(630)*
	30	*(-1.1)*	9720	*(2850)*	9310	*(2730)*	8910	*(2610)*	8530	*(2500)*	8140	*(2390)*	7740	*(2270)*	7350	*(2150)*
	25	*(-3.9)*	8650	*(2540)*	8310	*(2440)*	7940	*(2330)*	7590	*(2220)*	7250	*(2120)*	6900	*(2020)*	6550	*(1920)*
KQHA008M8	20	*(-6.7)*	7690	*(2250)*	7360	*(2160)*	7060	*(2070)*	6750	*(1980)*	6440	*(1890)*	6130	*(1800)*	5820	*(1710)*
	15	*(-9.4)*	6800	*(1990)*	6520	*(1910)*	6240	*(1830)*	5960	*(1750)*	5700	*(1670)*	5430	*(1590)*	5160	*(1510)*
Compressor	10	*(-12.2)*	6000	*(1760)*	5750	*(1690)*	5510	*(1610)*	5270	*(1540)*	5030	*(1470)*	4800	*(1410)*	4560	*(1340)*
Model	5	*(-15.0)*	5270	*(1540)*	5060	*(1480)*	4850	*(1420)*	4640	*(1360)*	4430	*(1300)*	4220	*(1240)*	4010	*(1180)*
RST55C1E	0	*(-17.8)*	4630	*(1360)*	4440	*(1300)*	4250	*(1250)*	4060	*(1190)*	3890	*(1140)*	3700	*(1080)*	3510	*(1030)*
	-5	*(-20.6)*	4040	*(1180)*	3890	*(1140)*	3720	*(1090)*	3560	*(1040)*	3390	*(990)*	3230	*(950)*	3070	*(900)*
	-10	*(-23.3)*	3540	*(1040)*	3380	*(990)*	3240	*(950)*	3100	*(910)*	2940	*(860)*	2800	*(820)*	2650	*(780)*
	30	*(-1.1)*	11800	*(3460)*	11300	*(3310)*	10900	*(3190)*	10400	*(3050)*	10000	*(2930)*	9610	*(2820)*	9180	*(2690)*
	25	*(-3.9)*	10500	*(3080)*	10100	*(2960)*	9730	*(2850)*	9360	*(2740)*	8980	*(2630)*	8600	*(2520)*	8210	*(2410)*
KQHA009M8	20	*(-6.7)*	9380	*(2750)*	9040	*(2650)*	8700	*(2550)*	8370	*(2450)*	8020	*(2350)*	7690	*(2250)*	7340	*(2150)*
	15	*(-9.4)*	8370	*(2450)*	8060	*(2360)*	7760	*(2270)*	7460	*(2190)*	7150	*(2100)*	6850	*(2010)*	6540	*(1920)*
Compressor	10	*(-12.2)*	7440	*(2180)*	7170	*(2100)*	6910	*(2030)*	6640	*(1950)*	6360	*(1860)*	6100	*(1790)*	5830	*(1710)*
Model	5	*(-15.0)*	6600	*(1930)*	6370	*(1870)*	6130	*(1800)*	5890	*(1730)*	5650	*(1660)*	5410	*(1590)*	5170	*(1520)*
RST64C1E	0	*(-17.8)*	5850	*(1710)*	5640	*(1650)*	5430	*(1590)*	5210	*(1530)*	5000	*(1470)*	4790	*(1400)*	4570	*(1340)*
	-5	*(-20.6)*	5160	*(1510)*	4970	*(1460)*	4780	*(1400)*	4590	*(1350)*	4400	*(1290)*	4210	*(1230)*	4020	*(1180)*
	-10	*(-23.3)*	4520	*(1320)*	4360	*(1280)*	4190	*(1230)*	4020	*(1180)*	3850	*(1130)*	3690	*(1080)*	3520	*(1030)*
	30	*(-1.1)*	12300	*(3600)*	11900	*(3490)*	11400	*(3340)*	10900	*(3190)*	10500	*(3080)*	10100	*(2960)*	9630	*(2820)*
	25	*(-3.9)*	11100	*(3250)*	10700	*(3140)*	10400	*(3050)*	9940	*(2910)*	9530	*(2790)*	9120	*(2670)*	8720	*(2560)*
KQHA010M8	20	*(-6.7)*	10100	*(2960)*	9720	*(2850)*	9350	*(2740)*	8980	*(2630)*	8600	*(2520)*	8220	*(2410)*	7840	*(2300)*
	15	*(-9.4)*	9070	*(2660)*	8750	*(2560)*	8410	*(2460)*	8070	*(2370)*	7720	*(2260)*	7360	*(2160)*	7010	*(2050)*
Compressor	10	*(-12.2)*	8130	*(2380)*	7830	*(2290)*	7520	*(2200)*	7200	*(2110)*	6890	*(2020)*	6570	*(1930)*	6240	*(1830)*
Model	5	*(-15.0)*	7250	*(2120)*	6960	*(2040)*	6680	*(1960)*	6390	*(1870)*	6110	*(1790)*	5810	*(1700)*	5510	*(1610)*
RST70C1E	0	*(-17.8)*	6410	*(1880)*	6150	*(1800)*	5900	*(1730)*	5640	*(1650)*	5370	*(1570)*	5090	*(1490)*	4820	*(1410)*
	-5	*(-20.6)*	5640	*(1650)*	5410	*(1590)*	5170	*(1520)*	4920	*(1440)*	4680	*(1370)*	4430	*(1300)*	4180	*(1230)*
	-10	*(-23.3)*	4920	*(1440)*	4710	*(1380)*	4490	*(1320)*	4270	*(1250)*	4040	*(1180)*	3810	*(1120)*	3570	*(1050)*
	30	*(-1.1)*	13300	*(3900)*	12900	*(3780)*	12500	*(3660)*	12000	*(3520)*	11600	*(3400)*	11000	*(3220)*	10500	*(3080)*
	25	*(-3.9)*	12200	*(3580)*	11800	*(3460)*	11300	*(3310)*	10900	*(3190)*	10400	*(3050)*	9990	*(2930)*	9510	*(2790)*
KQHA011M8	20	*(-6.7)*	11000	*(3220)*	10600	*(3110)*	10200	*(2990)*	9840	*(2880)*	9420	*(2760)*	9000	*(2640)*	8560	*(2510)*
	15	*(-9.4)*	9930	*(2910)*	9590	*(2810)*	9220	*(2700)*	8840	*(2590)*	8450	*(2480)*	8050	*(2360)*	7650	*(2240)*
Compressor	10	*(-12.2)*	8910	*(2610)*	8590	*(2520)*	8240	*(2410)*	7900	*(2320)*	7540	*(2210)*	7170	*(2100)*	6790	*(1990)*
Model	5	*(-15.0)*	7950	*(2330)*	7640	*(2240)*	7330	*(2150)*	7000	*(2050)*	6670	*(1950)*	6330	*(1860)*	5990	*(1760)*
RST80C1E	0	*(-17.8)*	7050	*(2070)*	6760	*(1980)*	6470	*(1900)*	6160	*(1810)*	5860	*(1720)*	5540	*(1620)*	5240	*(1540)*
	-5	*(-20.6)*	6200	*(1820)*	5930	*(1740)*	5660	*(1660)*	5390	*(1580)*	5100	*(1490)*	4820	*(1410)*	4540	*(1330)*
	-10	*(-23.3)*	5410	*(1590)*	5160	*(1510)*	4910	*(1440)*	4660	*(1370)*	4400	*(1290)*	4150	*(1220)*	3900	*(1140)*
	30	*(-1.1)*	15200	*(4450)*	14700	*(4310)*	14100	*(4130)*	13500	*(3960)*	13000	*(3810)*	12400	*(3630)*	11900	*(3490)*
	25	*(-3.9)*	14000	*(4100)*	13400	*(3930)*	12900	*(3780)*	12400	*(3630)*	11900	*(3490)*	11300	*(3310)*	10800	*(3170)*
KQHA013M8	20	*(-6.7)*	12700	*(3720)*	12200	*(3580)*	11800	*(3460)*	11200	*(3280)*	10800	*(3170)*	10300	*(3020)*	9840	*(2880)*
	15	*(-9.4)*	11400	*(3340)*	11000	*(3220)*	10600	*(3110)*	10200	*(2990)*	9730	*(2850)*	9300	*(2730)*	8860	*(2600)*
Compressor	10	*(-12.2)*	10300	*(3020)*	9930	*(2910)*	9530	*(2790)*	9140	*(2680)*	8740	*(2560)*	8330	*(2440)*	7930	*(2320)*
Model	5	*(-15.0)*	9230	*(2710)*	8870	*(2600)*	8520	*(2500)*	8150	*(2390)*	7770	*(2280)*	7400	*(2170)*	7020	*(2060)*
RST97C1E	0	*(-17.8)*	8200	*(2400)*	7880	*(2310)*	7540	*(2210)*	7210	*(2110)*	6870	*(2010)*	6530	*(1910)*	6170	*(1810)*
	-5	*(-20.6)*	7250	*(2120)*	6950	*(2040)*	6640	*(1950)*	6330	*(1860)*	6010	*(1760)*	5690	*(1670)*	5380	*(1580)*
	-10	*(-23.3)*	6350	*(1860)*	6080	*(1780)*	5790	*(1700)*	5500	*(1610)*	5220	*(1530)*	4910	*(1440)*	4620	*(1350)*

NOTES:
- Above ratings are based on mean temperature.
- To convert to dew point ratings, use 0.95 multiplier.
- For R449A, use R448A data.

CAPACITY DATA - R407C
MEDIUM TEMPERATURE

MODEL KQH	SATURATED SUCTION TEMP.		CAPACITY BTU/H (WATTS) R407C AMBIENT TEMPERATURE °F (°C)													
	° F	° C	80	(26.6)	85	(29.4)	90	(32.2)	95	(35.0)	100	(37.8)	105	(40.6)	110	(43.3)
	45	(7.2)	10700	(3140)	10300	(3020)	9900	(2900)	9500	(2780)	9110	(2670)	8730	(2560)	8330	(2440)
KQHA006M8	40	(4.4)	9640	(2830)	9280	(2720)	8940	(2620)	8580	(2510)	8210	(2410)	7860	(2300)	7510	(2200)
	35	(1.7)	8650	(2540)	8340	(2440)	8010	(2350)	7700	(2260)	7370	(2160)	7050	(2070)	6730	(1970)
	30	(-1.1)	7740	(2270)	7440	(2180)	7150	(2100)	6870	(2010)	6580	(1930)	6290	(1840)	6000	(1760)
Compressor	25	(-3.9)	6880	(2020)	6620	(1940)	6360	(1860)	6100	(1790)	5850	(1710)	5580	(1640)	5320	(1560)
Model	20	(-6.7)	6090	(1780)	5860	(1720)	5630	(1650)	5390	(1580)	5160	(1510)	4920	(1440)	4690	(1370)
RST45C1E	15	(-9.4)	5370	(1570)	5160	(1510)	4950	(1450)	4750	(1390)	4540	(1330)	4330	(1270)	4120	(1210)
	10	(-12.2)	4710	(1380)	4540	(1330)	4350	(1270)	4160	(1220)	3970	(1160)	3780	(1110)	3590	(1050)
	45	(7.2)	12600	(3690)	12200	(3580)	11800	(3460)	11200	(3280)	10800	(3170)	10300	(3020)	9850	(2890)
KQHA008M8	40	(4.4)	11400	(3340)	11000	(3220)	10600	(3110)	10200	(2990)	9730	(2850)	9300	(2730)	8870	(2600)
	35	(1.7)	10300	(3020)	9880	(2900)	9500	(2780)	9120	(2670)	8750	(2560)	8360	(2450)	7970	(2340)
	30	(-1.1)	9190	(2690)	8850	(2590)	8520	(2500)	8170	(2390)	7830	(2290)	7480	(2190)	7130	(2090)
Compressor	25	(-3.9)	8190	(2400)	7900	(2320)	7590	(2220)	7290	(2140)	6980	(2050)	6670	(1950)	6350	(1860)
Model	20	(-6.7)	7280	(2130)	7010	(2050)	6750	(1980)	6470	(1900)	6200	(1820)	5920	(1730)	5650	(1660)
RST55C1E	15	(-9.4)	6430	(1880)	6200	(1820)	5960	(1750)	5720	(1680)	5480	(1610)	5240	(1540)	4990	(1460)
	10	(-12.2)	5660	(1660)	5460	(1600)	5250	(1540)	5030	(1470)	4820	(1410)	4600	(1350)	4380	(1280)
	45	(7.2)	15300	(4480)	14700	(4310)	14200	(4160)	13700	(4020)	13000	(3810)	12400	(3630)	11900	(3490)
KQHA009M8	40	(4.4)	13900	(4070)	13300	(3900)	12800	(3750)	12300	(3600)	11800	(3460)	11200	(3280)	10700	(3140)
	35	(1.7)	12500	(3660)	12000	(3520)	11600	(3400)	11000	(3220)	10600	(3110)	10100	(2960)	9630	(2820)
	30	(-1.1)	11200	(3280)	10800	(3170)	10400	(3050)	9930	(2910)	9500	(2780)	9070	(2660)	8640	(2530)
Compressor	25	(-3.9)	10000	(2930)	9630	(2820)	9250	(2710)	8870	(2600)	8490	(2490)	8110	(2380)	7720	(2260)
Model	20	(-6.7)	8890	(2610)	8570	(2510)	8230	(2410)	7900	(2320)	7550	(2210)	7210	(2110)	6870	(2010)
RST64C1E	15	(-9.4)	7880	(2310)	7580	(2220)	7290	(2140)	6990	(2050)	6690	(1960)	6380	(1870)	6080	(1780)
	10	(-12.2)	6940	(2030)	6680	(1960)	6420	(1880)	6150	(1800)	5890	(1730)	5620	(1650)	5340	(1560)
	45	(7.2)	16300	(4780)	15600	(4570)	15100	(4430)	14500	(4250)	13900	(4070)	13300	(3900)	12700	(3720)
KQHA010M8	40	(4.4)	14700	(4310)	14200	(4160)	13700	(4020)	13100	(3840)	12600	(3690)	12100	(3550)	11400	(3340)
	35	(1.7)	13200	(3870)	12800	(3750)	12300	(3600)	11900	(3490)	11300	(3310)	10900	(3190)	10400	(3050)
	30	(-1.1)	12000	(3520)	11600	(3400)	11100	(3250)	10700	(3140)	10200	(2990)	9790	(2870)	9330	(2730)
Compressor	25	(-3.9)	10700	(3140)	10300	(3020)	9950	(2920)	9570	(2800)	9180	(2690)	8790	(2580)	8380	(2460)
Model	20	(-6.7)	9600	(2810)	9240	(2710)	8890	(2610)	8560	(2510)	8200	(2400)	7850	(2300)	7500	(2200)
RST70C1E	15	(-9.4)	8550	(2510)	8230	(2410)	7930	(2320)	7620	(2230)	7300	(2140)	6990	(2050)	6660	(1950)
	10	(-12.2)	7580	(2220)	7300	(2140)	7020	(2060)	6740	(1980)	6460	(1890)	6170	(1810)	5890	(1730)
	45	(7.2)	17400	(5100)	16800	(4920)	16200	(4750)	15500	(4540)	14900	(4370)	14300	(4190)	13500	(3960)
KQHA011M8	40	(4.4)	15900	(4660)	15200	(4450)	14700	(4310)	14100	(4130)	13500	(3960)	12900	(3780)	12300	(3600)
	35	(1.7)	14300	(4190)	13800	(4040)	13200	(3870)	12700	(3720)	12200	(3580)	11700	(3430)	11100	(3250)
	30	(-1.1)	12900	(3780)	12400	(3630)	12000	(3520)	11600	(3400)	11000	(3220)	10500	(3080)	10000	(2930)
Compressor	25	(-3.9)	11600	(3400)	11100	(3250)	10700	(3140)	10300	(3020)	9900	(2900)	9470	(2780)	9020	(2640)
Model	20	(-6.7)	10400	(3050)	10000	(2930)	9620	(2820)	9240	(2710)	8860	(2600)	8470	(2480)	8070	(2370)
RST80C1E	15	(-9.4)	9260	(2710)	8910	(2610)	8580	(2510)	8230	(2410)	7900	(2320)	7540	(2210)	7190	(2110)
	10	(-12.2)	8220	(2410)	7910	(2320)	7600	(2230)	7290	(2140)	6980	(2050)	6670	(1950)	6350	(1860)
	45	(7.2)	20500	(6010)	19700	(5770)	18900	(5540)	18200	(5330)	17400	(5100)	16700	(4890)	15900	(4660)
KQHA013M8	40	(4.4)	18600	(5450)	17900	(5250)	17200	(5040)	16500	(4840)	15900	(4660)	15100	(4430)	14400	(4220)
	35	(1.7)	16800	(4920)	16200	(4750)	15500	(4540)	14900	(4370)	14300	(4190)	13700	(4020)	13000	(3810)
	30	(-1.1)	15100	(4430)	14600	(4280)	14100	(4130)	13500	(3960)	12900	(3780)	12400	(3630)	11800	(3460)
Compressor	25	(-3.9)	13700	(4020)	13100	(3840)	12600	(3690)	12200	(3580)	11700	(3430)	11100	(3250)	10600	(3110)
Model	20	(-6.7)	12200	(3580)	11800	(3460)	11300	(3310)	10900	(3190)	10400	(3050)	9960	(2920)	9490	(2780)
RST97C1E	15	(-9.4)	10900	(3190)	10500	(3080)	10100	(2960)	9700	(2840)	9290	(2720)	8880	(2600)	8450	(2480)
	10	(-12.2)	9690	(2840)	9320	(2730)	8970	(2630)	8600	(2520)	8230	(2410)	7860	(2300)	7480	(2190)

NOTES:
- Above ratings are based on mean temperature.
- To convert to dew point ratings, use 0.95 multiplier.
- For R449A, use R448A data.

CAPACITY DATA - R407C
HIGH TEMPERATURE

MODEL KQH	SATURATED SUCTION TEMP.		CAPACITY BTU/H (WATTS) R407C AMBIENT TEMPERATURE °F (°C)													
	° F	° C	80	(26.6)	85	(29.4)	90	(32.2)	95	(35.0)	100	(37.8)	105	(40.6)	110	(43.3)
KQHA015H7 Compressor Model CR18K6E*	45	(7.2)	20800	(6100)	20200	(5920)	19400	(5690)	18800	(5510)	18100	(5300)	17400	(5100)	16700	(4890)
	40	(4.4)	18800	(5510)	18300	(5360)	17600	(5160)	17000	(4980)	16300	(4780)	15600	(4570)	15000	(4400)
	35	(1.7)	17000	(4980)	16400	(4810)	15900	(4660)	15200	(4450)	14600	(4280)	14100	(4130)	13400	(3930)
	30	(-1.1)	15200	(4450)	14700	(4310)	14200	(4160)	13700	(4020)	13000	(3810)	12500	(3660)	12000	(3520)
	25	(-3.9)	13700	(4020)	13100	(3840)	12600	(3690)	12100	(3550)	11600	(3400)	11000	(3220)	10500	(3080)
	20	(-6.7)	12100	(3550)	11600	(3400)	11100	(3250)	10600	(3110)	10190	(2990)	9660	(2830)	9140	(2680)
	15	(-9.4)	10600	(3110)	10190	(2990)	9770	(2860)	9240	(2710)	8820	(2580)	8300	(2430)	7880	(2310)
	10	(-12.2)	9240	(2710)	8820	(2580)	8400	(2460)	7980	(2340)	7560	(2220)	7140	(2090)	6720	(1970)
KQHA020H7 Compressor Model CR24K6E*	45	(7.2)	27000	(7910)	26100	(7650)	25200	(7390)	24400	(7150)	23400	(6860)	22600	(6620)	21600	(6330)
	40	(4.4)	24500	(7180)	23600	(6920)	22800	(6680)	21900	(6420)	21100	(6180)	20300	(5950)	19400	(5690)
	35	(1.7)	22100	(6480)	21300	(6240)	20600	(6040)	19700	(5770)	19000	(5570)	18200	(5330)	17400	(5100)
	30	(-1.1)	19700	(5770)	19100	(5600)	18400	(5390)	17600	(5160)	16900	(4950)	16200	(4750)	15400	(4510)
	25	(-3.9)	17600	(5160)	17000	(4980)	16400	(4810)	15600	(4570)	15000	(4400)	14300	(4190)	13700	(4020)
	20	(-6.7)	15600	(4570)	15000	(4400)	14400	(4220)	13800	(4040)	13100	(3840)	12500	(3660)	11900	(3490)
	15	(-9.4)	13800	(4040)	13100	(3840)	12600	(3690)	12000	(3520)	11400	(3340)	10800	(3170)	10290	(3020)
	10	(-12.2)	12000	(3520)	11400	(3340)	10900	(3190)	10290	(3020)	9770	(2860)	9240	(2710)	8720	(2560)
KQHA025H7 Compressor Model CR32K6E*	45	(7.2)	35000	(10260)	33800	(9910)	32800	(9610)	31600	(9260)	30300	(8880)	29200	(8560)	28000	(8210)
	40	(4.4)	31700	(9290)	30700	(9000)	29600	(8670)	28600	(8380)	27400	(8030)	26400	(7740)	25200	(7390)
	35	(1.7)	28700	(8410)	27700	(8120)	26700	(7820)	25600	(7500)	24600	(7210)	23600	(6920)	22600	(6620)
	30	(-1.1)	25700	(7530)	24800	(7270)	23900	(7000)	22900	(6710)	21900	(6420)	21000	(6150)	20100	(5890)
	25	(-3.9)	23000	(6740)	22200	(6510)	21200	(6210)	20400	(5980)	19500	(5710)	18600	(5450)	17600	(5160)
	20	(-6.7)	20400	(5980)	19600	(5740)	18800	(5510)	18000	(5280)	17100	(5010)	16300	(4780)	15400	(4510)
	15	(-9.4)	18000	(5280)	17200	(5040)	16400	(4810)	15600	(4570)	14900	(4370)	14100	(4130)	13300	(3900)
	10	(-12.2)	15500	(4540)	14900	(4370)	14200	(4160)	13400	(3930)	12700	(3720)	12000	(3520)	11300	(3310)
KQHA030H7 Compressor Model CR38K6E*	45	(7.2)	40800	(11960)	39300	(11520)	37600	(11020)	35900	(10520)	34100	(9990)	32400	(9500)	30800	(9030)
	40	(4.4)	37000	(10840)	35400	(10370)	33900	(9940)	32200	(9440)	30700	(9000)	29100	(8530)	27400	(8030)
	35	(1.7)	33300	(9760)	31800	(9320)	30300	(8880)	28900	(8470)	27400	(8030)	25800	(7560)	24400	(7150)
	30	(-1.1)	29800	(8730)	28500	(8350)	27100	(7940)	25600	(7500)	24300	(7120)	22800	(6680)	21400	(6270)
	25	(-3.9)	26500	(7770)	25200	(7390)	23900	(7000)	22700	(6650)	21300	(6240)	20000	(5860)	18700	(5480)
	20	(-6.7)	23300	(6830)	22200	(6510)	21000	(6150)	19700	(5770)	18600	(5450)	17300	(5070)	16100	(4720)
	15	(-9.4)	20400	(5980)	19300	(5660)	18200	(5330)	17000	(4980)	15900	(4660)	14700	(4310)	13700	(4020)
	10	(-12.2)	17500	(5130)	16600	(4860)	15500	(4540)	14400	(4220)	13300	(3900)	12300	(3600)	11200	(3280)
KQHA035H7 Compressor Model CR42K6E*	45	(7.2)	49200	(14420)	47400	(13890)	45500	(13330)	43500	(12750)	41500	(12160)	39500	(11580)	37400	(10960)
	40	(4.4)	44200	(12950)	42500	(12460)	40700	(11930)	39000	(11430)	37100	(10870)	35100	(10290)	33200	(9730)
	35	(1.7)	39600	(11610)	38000	(11140)	36300	(10640)	34700	(10170)	32900	(9640)	31100	(9110)	29300	(8590)
	30	(-1.1)	35300	(10350)	33800	(9910)	32200	(9440)	30700	(9000)	29000	(8500)	27400	(8030)	25700	(7530)
	25	(-3.9)	31300	(9170)	29900	(8760)	28500	(8350)	27000	(7910)	25400	(7440)	23800	(6980)	22400	(6560)
	20	(-6.7)	27500	(8060)	26300	(7710)	24900	(7300)	23500	(6890)	22100	(6480)	20600	(6040)	19100	(5600)
	15	(-9.4)	23900	(7000)	22800	(6680)	21500	(6300)	20200	(5920)	18900	(5540)	17500	(5130)	16200	(4750)
	10	(-12.2)	20600	(6040)	19500	(5710)	18300	(5360)	17100	(5010)	15900	(4660)	14600	(4280)	13300	(3900)
KQHA040H7 Compressor Model CR53KQE*	45	(7.2)	63200	(18520)	60800	(17820)	58300	(17090)	55800	(16350)	53100	(15560)	50500	(14800)	47800	(14010)
	40	(4.4)	56900	(16680)	54600	(16000)	52300	(15330)	49900	(14620)	47500	(13920)	45000	(13190)	42500	(12460)
	35	(1.7)	51000	(14950)	48900	(14330)	46700	(13690)	44500	(13040)	42200	(12370)	39900	(11690)	37600	(11020)
	30	(-1.1)	45500	(13330)	43600	(12780)	41500	(12160)	39400	(11550)	37300	(10930)	35200	(10320)	33000	(9670)
	25	(-3.9)	40300	(11810)	38500	(11280)	36600	(10730)	34700	(10170)	32700	(9580)	30700	(9000)	28700	(8410)
	20	(-6.7)	35500	(10400)	33800	(9910)	32000	(9380)	30200	(8850)	28400	(8320)	26600	(7800)	24700	(7240)
	15	(-9.4)	31000	(9090)	29400	(8620)	27700	(8120)	26000	(7620)	24400	(7150)	22600	(6620)	20900	(6130)
	10	(-12.2)	26700	(7820)	25200	(7390)	23600	(6920)	22100	(6480)	20400	(5980)	18800	(5510)	17200	(5040)
KQHA050H7 Compressor Model CRNQ-050E*	45	(7.2)	74200	(21750)	71200	(20870)	68000	(19930)	65000	(19050)	62000	(18170)	58800	(17230)	55800	(16350)
	40	(4.4)	67500	(19780)	64700	(18960)	61800	(18110)	59000	(17290)	56200	(16470)	53200	(15590)	50400	(14770)
	35	(1.7)	61100	(17910)	58500	(17140)	55900	(16380)	53200	(15590)	50500	(14800)	47900	(14040)	45400	(13310)
	30	(-1.1)	55000	(16120)	52500	(15390)	50100	(14680)	47700	(13980)	45300	(13280)	42800	(12540)	40400	(11840)
	25	(-3.9)	49100	(14390)	46900	(13740)	44600	(13070)	42400	(12430)	40200	(11780)	38000	(11140)	35800	(10490)
	20	(-6.7)	43700	(12810)	41600	(12190)	39500	(11580)	37400	(10960)	35400	(10370)	33400	(9790)	31400	(9200)
	15	(-9.4)	38500	(11280)	36500	(10700)	34700	(10170)	32800	(9610)	30900	(9060)	29100	(8530)	27300	(8000)
	10	(-12.2)	33700	(9880)	31900	(9350)	30100	(8820)	28500	(8350)	26700	(7820)	25100	(7360)	23400	(6860)

NOTES: - Above ratings are based on mean temperature.
- To convert to dew point ratings, use 0.95 multiplier.

*** Not suitable for R448A**

KQHA
COPELAND

CAPACITY DATA - R404A R507
MEDIUM TEMPERATURE

60Hz

MODEL KQH	SATURATED SUCTION TEMPERATURE ° F	° C	CAPACITY BTU/H (WATTS) R404A R507 AMBIENT TEMPERATURE °F (°C) 80	(26.6)	85	(29.4)	90	(32.2)	95	(35.0)	100	(37.8)	105	(40.6)	110	(43.3)
KQHA006M8 Compressor Model RST45C1E	30	(-1.1)	8230	(2410)	7900	(2320)	7550	(2210)	7190	(2110)	6840	(2000)	6470	(1900)	6100	(1790)
	25	(-3.9)	7500	(2200)	7190	(2110)	6880	(2020)	6550	(1920)	6220	(1820)	5890	(1730)	5550	(1630)
	20	(-6.7)	6800	(1990)	6500	(1900)	6200	(1820)	5900	(1730)	5600	(1640)	5300	(1550)	5000	(1470)
	15	(-9.4)	6100	(1790)	5900	(1730)	5600	(1640)	5400	(1580)	5100	(1490)	4800	(1410)	4500	(1320)
	10	(-12.2)	5500	(1610)	5300	(1550)	5000	(1470)	4800	(1410)	4600	(1350)	4300	(1260)	4000	(1170)
	5	(-15.0)	4900	(1440)	4700	(1380)	4500	(1320)	4300	(1260)	4100	(1200)	3800	(1110)	3600	(1060)
	0	(-17.8)	4400	(1290)	4200	(1230)	4000	(1170)	3800	(1110)	3600	(1060)	3400	(1000)	3200	(940)
	-5	(-20.6)	3800	(1110)	3700	(1080)	3500	(1030)	3300	(970)	3200	(940)	3000	(880)	2800	(820)
	-10	(-23.3)	3400	(1000)	3200	(940)	3100	(910)	2900	(850)	2800	(820)	2600	(760)	2400	(700)
KQHA008M8 Compressor Model RST55C1E	30	(-1.1)	9860	(2890)	9460	(2770)	9060	(2660)	8650	(2540)	8240	(2410)	7820	(2290)	7410	(2170)
	25	(-3.9)	8970	(2630)	8600	(2520)	8230	(2410)	7860	(2300)	7500	(2200)	7120	(2090)	6740	(1980)
	20	(-6.7)	8100	(2370)	7800	(2290)	7500	(2200)	7100	(2080)	6800	(1990)	6400	(1880)	6100	(1790)
	15	(-9.4)	7300	(2140)	7000	(2050)	6700	(1960)	6400	(1880)	6100	(1790)	5800	(1700)	5500	(1610)
	10	(-12.2)	6600	(1930)	6300	(1850)	6100	(1790)	5800	(1700)	5500	(1610)	5200	(1520)	4900	(1440)
	5	(-15.0)	5900	(1730)	5700	(1670)	5400	(1580)	5200	(1520)	4900	(1440)	4700	(1380)	4400	(1290)
	0	(-17.8)	5300	(1550)	5100	(1490)	4800	(1410)	4600	(1350)	4400	(1290)	4200	(1230)	3900	(1140)
	-5	(-20.6)	4700	(1380)	4500	(1320)	4300	(1260)	4100	(1200)	3900	(1140)	3700	(1080)	3500	(1030)
	-10	(-23.3)	4100	(1200)	3900	(1140)	3800	(1110)	3600	(1060)	3400	(1000)	3200	(940)	3000	(880)
KQHA009M8 Compressor Model RST64C1E	30	(-1.1)	11400	(3340)	11000	(3220)	10600	(3110)	10100	(2960)	9660	(2830)	9180	(2690)	8700	(2550)
	25	(-3.9)	10500	(3080)	10100	(2960)	9710	(2850)	9300	(2730)	8870	(2600)	8440	(2470)	7990	(2340)
	20	(-6.7)	9600	(2810)	9250	(2710)	8880	(2600)	8500	(2490)	8110	(2380)	7710	(2260)	7300	(2140)
	15	(-9.4)	8740	(2560)	8420	(2470)	8080	(2370)	7730	(2270)	7370	(2160)	7010	(2050)	6630	(1940)
	10	(-12.2)	7920	(2320)	7630	(2240)	7320	(2150)	7000	(2050)	6670	(1950)	6330	(1860)	5990	(1760)
	5	(-15.0)	7140	(2090)	6870	(2010)	6580	(1930)	6290	(1840)	5990	(1760)	5680	(1660)	5370	(1570)
	0	(-17.8)	6390	(1870)	6140	(1800)	5880	(1720)	5610	(1640)	5340	(1560)	5060	(1480)	4780	(1400)
	-5	(-20.6)	5690	(1670)	5460	(1600)	5210	(1530)	4970	(1460)	4720	(1380)	4470	(1310)	4220	(1240)
	-10	(-23.3)	5030	(1470)	4810	(1410)	4590	(1350)	4360	(1280)	4140	(1210)	3910	(1150)	3690	(1080)
KQHA010M8 Compressor Model RST70C1E	30	(-1.1)	12600	(3690)	12100	(3550)	11600	(3400)	11100	(3250)	10600	(3110)	10000	(2930)	9500	(2780)
	25	(-3.9)	11500	(3370)	11100	(3250)	10600	(3110)	10100	(2960)	9670	(2830)	9190	(2690)	8690	(2550)
	20	(-6.7)	10500	(3080)	10100	(2960)	9670	(2830)	9240	(2710)	8810	(2580)	8370	(2450)	7920	(2320)
	15	(-9.4)	9520	(2790)	9150	(2680)	8770	(2570)	8380	(2460)	7980	(2340)	7580	(2220)	7160	(2100)
	10	(-12.2)	8590	(2520)	8250	(2420)	7910	(2320)	7550	(2210)	7180	(2100)	6810	(2000)	6440	(1890)
	5	(-15.0)	7710	(2260)	7390	(2170)	7080	(2070)	6760	(1980)	6430	(1880)	6090	(1780)	5740	(1680)
	0	(-17.8)	6870	(2010)	6580	(1930)	6300	(1850)	6010	(1760)	5700	(1670)	5400	(1580)	5080	(1490)
	-5	(-20.6)	6090	(1780)	5830	(1710)	5570	(1630)	5290	(1550)	5020	(1470)	4750	(1390)	4450	(1300)
	-10	(-23.3)	5360	(1570)	5110	(1500)	4870	(1430)	4630	(1360)	4380	(1280)	4130	(1210)	3860	(1130)
KQHA011M8 Compressor Model RST80C1E	30	(-1.1)	13500	(3960)	13000	(3810)	12500	(3660)	12000	(3520)	11400	(3340)	10800	(3170)	10300	(3020)
	25	(-3.9)	12400	(3630)	12000	(3520)	11500	(3370)	11000	(3220)	10500	(3080)	9920	(2910)	9370	(2750)
	20	(-6.7)	11400	(3340)	10900	(3190)	10500	(3080)	10000	(2930)	9540	(2800)	9040	(2650)	8520	(2500)
	15	(-9.4)	10400	(3050)	9970	(2920)	9550	(2800)	9110	(2670)	8660	(2540)	8190	(2400)	7720	(2260)
	10	(-12.2)	9410	(2760)	9030	(2650)	8640	(2530)	8240	(2410)	7820	(2290)	7390	(2170)	6950	(2040)
	5	(-15.0)	8490	(2490)	8150	(2390)	7780	(2280)	7410	(2170)	7020	(2060)	6630	(1940)	6230	(1830)
	0	(-17.8)	7630	(2240)	7300	(2140)	6970	(2040)	6620	(1940)	6270	(1840)	5900	(1730)	5540	(1620)
	-5	(-20.6)	6810	(2000)	6510	(1910)	6200	(1820)	5880	(1720)	5550	(1630)	5230	(1530)	4900	(1440)
	-10	(-23.3)	6030	(1770)	5760	(1690)	5470	(1600)	5180	(1520)	4890	(1430)	4590	(1350)	4300	(1260)
KQHA013M8 Compressor Model RST97C1E	30	(-1.1)	15800	(4630)	15200	(4450)	14500	(4250)	13900	(4070)	13200	(3870)	12500	(3660)	11800	(3460)
	25	(-3.9)	14600	(4280)	14000	(4100)	13400	(3930)	12800	(3750)	12200	(3580)	11600	(3400)	10900	(3190)
	20	(-6.7)	13400	(3930)	12900	(3780)	12300	(3600)	11800	(3460)	11200	(3280)	10600	(3110)	10000	(2930)
	15	(-9.4)	12200	(3580)	11800	(3460)	11300	(3310)	10800	(3170)	10200	(2990)	9670	(2830)	9120	(2670)
	10	(-12.2)	11100	(3250)	10700	(3140)	10200	(2990)	9740	(2850)	9250	(2710)	8760	(2570)	8240	(2410)
	5	(-15.0)	10000	(2930)	9620	(2820)	9210	(2700)	8770	(2570)	8330	(2440)	7860	(2300)	7400	(2170)
	0	(-17.8)	8990	(2630)	8620	(2530)	8230	(2410)	7830	(2290)	7420	(2170)	7000	(2050)	6580	(1930)
	-5	(-20.6)	8000	(2340)	7670	(2250)	7310	(2140)	6950	(2040)	6570	(1930)	6200	(1820)	5810	(1700)
	-10	(-23.3)	7080	(2070)	6770	(1980)	6450	(1890)	6120	(1790)	5780	(1690)	5430	(1590)	5080	(1490)

NOTES:
- Above ratings are based on mean temperature.
- To convert to dew point ratings, use 0.95 multiplier.
- For R449A, use R448A data.

CAPACITY DATA - R404A R507
EXTENDED MEDIUM TEMPERATURE

MODEL	SATURATED SUCTION TEMP.		CAPACITY BTU/H (WATTS) R404A R507 AMBIENT TEMPERATURE °F (°C)											
KQH	F°	(C°)	80	(26.6)	85	(29.4)	90	(32.2)	95	(35.0)	100	(37.8)	105	(40.6)	110	(43.3)
	40	(4.4)	24260	(7110)	22980	(6735)	21720	(6366)	20460	(5996)	19220	(5633)	17960	(5264)	16720	(4900)
	35	(1.7)	22070	(6468)	20910	(6128)	19740	(5785)	18570	(5442)	17420	(5105)	16280	(4771)	15120	(4431)
	30	(-1.1)	20350	(5964)	19180	(5621)	18020	(5281)	16870	(4944)	15730	(4610)	14600	(4279)	13470	(3948)
KQHA015E6	25	(-3.9)	18530	(5431)	17460	(5117)	16390	(4803)	15330	(4493)	14270	(4182)	13230	(3877)	12190	(3573)
	20	(-6.7)	16740	(4906)	15750	(4616)	14770	(4329)	13800	(4044)	12830	(3760)	11870	(3479)	10910	(3197)
	15	(-9.4)	14980	(4390)	14080	(4126)	13190	(3866)	12300	(3605)	11410	(3344)	10530	(3086)	9660	(2831)
	10	(-12.2)	13280	(3892)	12460	(3652)	11640	(3411)	10840	(3177)	10030	(2940)	9220	(2702)	8420	(2468)
Compressor	5	(-15)	11640	(3411)	10900	(3194)	10160	(2978)	9420	(2761)	8690	(2547)	7960	(2333)	7230	(2119)
Model	0	(-17.8)	10070	(2951)	9410	(2758)	8740	(2561)	8070	(2365)	7410	(2172)	6750	(1978)	6090	(1785)
CS10K6E	-5	(-20.6)	8190	(2400)	7620	(2233)	7050	(2066)	6480	(1899)	5910	(1732)	5340	(1565)	4770	(1398)
	-10	(-23.3)	6890	(2019)	6380	(1870)	5870	(1720)	5360	(1571)	4840	(1418)	4330	(1269)	3810	(1117)
	-15	(-26.1)	5700	(1671)	5250	(1539)	4790	(1404)	4330	(1269)	3870	(1134)	3400	(996)	2930	(859)
	-20	(-28.9)	4650	(1363)	4250	(1246)	3840	(1125)	3430	(1005)	3010	(882)	2580	(756)	2160	(633)
	-25	(-31.7)	3740	(1096)	3380	(991)	3020	(885)	2640	(774)	2270	(665)	1880	(551)	1490	(437)
	40	(4.4)	26630	(7804)	25240	(7397)	23880	(6999)	22500	(6594)	21140	(6196)	19780	(5797)	18440	(5404)
	35	(1.7)	24350	(7136)	23080	(6764)	21810	(6392)	20550	(6023)	19290	(5653)	18040	(5287)	16800	(4924)
	30	(-1.1)	22940	(6723)	21680	(6354)	20430	(5987)	19190	(5624)	17960	(5264)	16730	(4903)	15510	(4546)
KQHA020E6	25	(-3.9)	20940	(6137)	19760	(5791)	18600	(5451)	17440	(5111)	16300	(4777)	15150	(4440)	14020	(4109)
	20	(-6.7)	18970	(5560)	17880	(5240)	16810	(4927)	15740	(4613)	14670	(4299)	13620	(3992)	12570	(3684)
	15	(-9.4)	17070	(5003)	16070	(4710)	15070	(4417)	14080	(4126)	13090	(3836)	12120	(3552)	11150	(3268)
	10	(-12.2)	15230	(4463)	14300	(4191)	13380	(3921)	12470	(3655)	11570	(3391)	10680	(3130)	9790	(2869)
Compressor	5	(-15)	13450	(3942)	12600	(3693)	11760	(3447)	10930	(3203)	10110	(2963)	9290	(2723)	8480	(2485)
Model	0	(-17.8)	11760	(3447)	10980	(3218)	10220	(2995)	9460	(2772)	8720	(2556)	7970	(2336)	7230	(2119)
CS12K6E	-5	(-20.6)	9660	(2831)	8990	(2635)	8330	(2441)	7680	(2251)	7040	(2063)	6410	(1879)	5770	(1691)
	-10	(-23.3)	8220	(2409)	7620	(2233)	7020	(2057)	6440	(1887)	5870	(1720)	5300	(1553)	4730	(1386)
	-15	(-26.1)	6880	(2016)	6340	(1858)	5810	(1703)	5290	(1550)	4780	(1401)	4270	(1251)	3770	(1105)
	-20	(-28.9)	5640	(1653)	5160	(1512)	4700	(1377)	4240	(1243)	3790	(1111)	3340	(979)	2900	(850)
	-25	(-31.7)	4520	(1325)	4100	(1202)	3690	(1081)	3290	(964)	2900	(850)	2510	(736)	2130	(624)
	40	(4.4)	30010	(8795)	28500	(8353)	26990	(7910)	25470	(7465)	23960	(7022)	22450	(6579)	20950	(6140)
	35	(1.7)	27620	(8095)	26210	(7681)	24810	(7271)	23400	(6858)	22000	(6448)	20600	(6037)	19200	(5627)
	30	(-1.1)	25250	(7400)	23870	(6996)	22480	(6588)	21090	(6181)	19720	(5779)	18330	(5372)	16950	(4968)
KQHA025E6	25	(-3.9)	23240	(6811)	21970	(6439)	20700	(6067)	19430	(5694)	18150	(5319)	16880	(4947)	15600	(4572)
	20	(-6.7)	21230	(6222)	20070	(5882)	18900	(5539)	17730	(5196)	16570	(4856)	15410	(4516)	14250	(4176)
	15	(-9.4)	19250	(5642)	18180	(5328)	17120	(5017)	16050	(4704)	14990	(4393)	13930	(4082)	12870	(3772)
	10	(-12.2)	17280	(5064)	16320	(4783)	15350	(4499)	14390	(4217)	13430	(3936)	12460	(3652)	11510	(3373)
Compressor	5	(-15)	15370	(4505)	14500	(4250)	13630	(3995)	12760	(3740)	11900	(3488)	11030	(3233)	10160	(2978)
Model	0	(-17.8)	13530	(3965)	12750	(3737)	11960	(3505)	11180	(3277)	10400	(3048)	9620	(2819)	8850	(2594)
CS14K6E	-5	(-20.6)	11220	(3288)	10540	(3089)	9870	(2893)	9210	(2699)	8540	(2503)	7880	(2309)	7220	(2116)
	-10	(-23.3)	9650	(2828)	9050	(2652)	8450	(2476)	7850	(2301)	7260	(2128)	6670	(1955)	6080	(1782)
	-15	(-26.1)	8200	(2403)	7660	(2245)	7130	(2090)	6600	(1934)	6070	(1779)	5550	(1627)	5030	(1474)
	-20	(-28.9)	6900	(2022)	6420	(1882)	5940	(1741)	5470	(1603)	5000	(1465)	4530	(1328)	4070	(1193)
	-25	(-31.7)	5760	(1688)	5330	(1562)	4900	(1436)	4470	(1310)	4050	(1187)	3640	(1067)	3230	(947)
	30	(-1.1)	32100	(9410)	30280	(8870)	28470	(8340)	26650	(7810)	24850	(7280)	23060	(6760)	21290	(6240)
	25	(-3.9)	29610	(8680)	27920	(8180)	26220	(7680)	24540	(7190)	22860	(6700)	21190	(6210)	19550	(5730)
KQHA030E6	20	(-6.7)	27080	(7940)	25500	(7470)	23930	(7010)	22370	(6560)	20810	(6100)	19280	(5650)	17760	(5200)
	15	(-9.4)	24530	(7190)	23070	(6760)	21620	(6340)	20170	(5910)	18740	(5490)	17330	(5080)	15930	(4670)
	10	(-12.2)	21980	(6440)	20640	(6050)	19310	(5660)	17990	(5270)	16670	(4890)	15370	(4500)	14100	(4130)
Compressor	5	(-15)	19480	(5710)	18260	(5350)	17040	(4990)	15820	(4640)	14630	(4290)	13450	(3940)	12310	(3610)
Model	0	(-17.8)	17040	(4990)	15930	(4670)	14830	(4350)	13730	(4020)	12650	(3710)	11590	(3400)	10560	(3090)
CS18K6E	-5	(-20.6)	14010	(4110)	13060	(3830)	12120	(3550)	11180	(3280)	10260	(3010)	9360	(2740)	8500	(2490)
	-10	(-23.3)	11930	(3500)	11090	(3250)	10250	(3000)	9420	(2760)	8600	(2520)	7820	(2290)	7070	(2070)
	-15	(-26.1)	10040	(2940)	9290	(2720)	8550	(2510)	7830	(2290)	7120	(2090)	6440	(1890)	5800	(1700)
	-20	(-28.9)	8360	(2450)	7720	(2260)	7080	(2070)	6450	(1890)	5850	(1710)	5280	(1550)	4750	(1390)
	-25	(-31.7)	6950	(2040)	6400	(1880)	5860	(1720)	5340	(1560)	4840	(1420)	4380	(1280)	3970	(1160)
	30	(-1.1)	41300	(12100)	39100	(11460)	36900	(10810)	34700	(10170)	32600	(9550)	30600	(8970)	28600	(8380)
	25	(-3.9)	37000	(10840)	34900	(10230)	32900	(9640)	30900	(9060)	29000	(8500)	26900	(7880)	25000	(7330)
KQHA035E6	20	(-6.7)	33000	(9670)	31100	(9110)	29100	(8530)	27300	(8000)	25500	(7470)	23800	(6980)	22100	(6480)
	15	(-9.4)	29300	(8590)	27600	(8090)	25900	(7590)	24200	(7090)	22600	(6620)	21000	(6150)	19400	(5690)
	10	(-12.2)	26000	(7620)	24400	(7150)	22900	(6710)	21400	(6270)	19900	(5830)	18400	(5390)	16900	(4950)
Compressor	5	(-15)	23000	(6740)	21600	(6330)	20200	(5920)	18800	(5510)	17300	(5070)	16000	(4690)	14700	(4310)
Model	0	(-17.8)	20200	(5920)	18900	(5540)	17600	(5160)	16300	(4780)	15100	(4430)	13900	(4070)	12700	(3720)
CS20K6E	-5	(-20.6)	16800	(4920)	15700	(4600)	14600	(4280)	13500	(3960)	12400	(3630)	11400	(3340)	10300	(3020)
	-10	(-23.3)	14600	(4280)	13500	(3960)	12600	(3690)	11600	(3400)	10600	(3110)	9600	(2810)	8600	(2520)
	-15	(-26.1)	12400	(3630)	11500	(3370)	10600	(3110)	9700	(2840)	8800	(2580)	7900	(2320)	6900	(2020)
	-20	(-28.9)	10400	(3050)	9500	(2780)	8700	(2550)	7900	(2320)	7000	(2050)	6100	(1790)	5200	(1520)
	-25	(-31.7)	8400	(2460)	7600	(2230)	6800	(1990)	6000	(1760)	5200	(1520)	4300	(1260)	3500	(1030)

KQHA
COPELAND

CAPACITY DATA - R404A R507
LOW TEMPERATURE

60Hz

MODEL KQH	SATURATED SUCTION TEMP. F°	(C°)	CAPACITY BTU/H (WATTS) R404A R507 AMBIENT TEMPERATURE °F (°C) 80	(26.6)	85	(29.4)	90	(32.2)	95	(35.0)	100	(37.8)	105	(40.6)	110	(43.3)
	10	(-12.2)	11800	(3458)	11170	(3274)	10520	(3083)	9850	(2887)	9160	(2685)	8440	(2474)	7720	(2263)
	5	(-15.0)	10350	(3033)	9790	(2869)	9210	(2699)	8600	(2520)	7980	(2339)	7340	(2151)	6690	(1961)
KQHA010L6	0	(-17.8)	9020	(2644)	8520	(2497)	8000	(2345)	7460	(2186)	6900	(2022)	6330	(1855)	5740	(1682)
	-5	(-20.6)	7800	(2286)	7350	(2154)	6890	(2019)	6420	(1882)	5920	(1735)	5420	(1588)	4890	(1433)
Compressor	-10	(-23.3)	6690	(1961)	6300	(1846)	5890	(1726)	5460	(1600)	5030	(1474)	4590	(1345)	4130	(1210)
Model	-15	(-26.1)	5680	(1665)	5330	(1562)	4980	(1459)	4600	(1348)	4220	(1237)	3830	(1122)	3440	(1008)
CF04K6E	-20	(-28.9)	4780	(1401)	4470	(1310)	4150	(1216)	3820	(1120)	3500	(1026)	3160	(926)	2820	(826)
	-25	(-31.7)	3960	(1161)	3690	(1081)	3410	(999)	3130	(917)	2840	(832)	2550	(747)	2270	(665)
	-30	(-34.4)	3220	(944)	2980	(873)	2740	(803)	2490	(730)	2250	(659)	2010	(589)	1760	(516)
	10	(-12.2)	16350	(4790)	15500	(4540)	14630	(4290)	13760	(4030)	12870	(3770)	11980	(3510)	11080	(3250)
	5	(-15.0)	14870	(4360)	14070	(4120)	13270	(3890)	12460	(3650)	11640	(3410)	10830	(3170)	10000	(2930)
KQHA020L6	0	(-17.8)	13390	(3920)	12650	(3710)	11910	(3490)	11160	(3270)	10420	(3050)	9660	(2830)	8900	(2610)
	-5	(-20.6)	11930	(3500)	11250	(3300)	10560	(3090)	9870	(2890)	9190	(2690)	8510	(2490)	7820	(2290)
Compressor	-10	(-23.3)	10510	(3080)	9870	(2890)	9240	(2710)	8610	(2520)	7990	(2340)	7370	(2160)	6760	(1980)
Model	-15	(-26.1)	9120	(2670)	8550	(2510)	7970	(2340)	7390	(2170)	6840	(2000)	6280	(1840)	5740	(1680)
CF06K6E	-20	(-28.9)	7810	(2290)	7280	(2130)	6750	(1980)	6240	(1830)	5730	(1680)	5250	(1540)	4770	(1400)
	-25	(-31.7)	6570	(1930)	6080	(1780)	5610	(1640)	5150	(1510)	4700	(1380)	4280	(1250)	3890	(1140)
	-30	(-34.4)	5440	(1590)	5000	(1470)	4570	(1340)	4160	(1220)	3780	(1110)	3420	(1000)	3090	(910)
	10	(-12.2)	22830	(6691)	21580	(6324)	20330	(5958)	19100	(5598)	17870	(5237)	16660	(4883)	15470	(4534)
	5	(-15.0)	20700	(6067)	19530	(5724)	18390	(5390)	17250	(5055)	16120	(4724)	15000	(4396)	13900	(4074)
KQHA025L6	0	(-17.8)	18630	(5460)	17560	(5146)	16510	(4839)	15460	(4531)	14420	(4226)	13400	(3927)	12380	(3628)
	-5	(-20.6)	16630	(4874)	15660	(4589)	14690	(4305)	13730	(4024)	12780	(3745)	11840	(3470)	10930	(3203)
Compressor	-10	(-23.3)	14730	(4317)	13830	(4053)	12950	(3795)	12080	(3540)	11210	(3285)	10360	(3036)	9530	(2793)
Model	-15	(-26.1)	12900	(3781)	12100	(3546)	11290	(3309)	10500	(3077)	9710	(2846)	8950	(2623)	8200	(2403)
CF09K6E	-20	(-28.9)	11180	(3277)	10450	(3063)	9710	(2846)	9000	(2638)	8300	(2432)	7610	(2230)	6940	(2034)
	-25	(-31.7)	9560	(2802)	8890	(2605)	8240	(2415)	7590	(2224)	6970	(2043)	6350	(1861)	5750	(1685)
	-30	(-34.4)	8040	(2356)	7440	(2180)	6860	(2010)	6280	(1840)	5720	(1676)	5190	(1521)	4660	(1366)
	10	(-12.2)	26700	(7825)	25200	(7385)	23700	(6946)	22210	(6509)	20730	(6075)	19260	(5645)	17810	(5220)
	5	(-15.0)	24330	(7130)	22940	(6723)	21570	(6322)	20190	(5917)	18840	(5521)	17490	(5126)	16160	(4736)
KQHA030L6	0	(-17.8)	22040	(6459)	20780	(6090)	19520	(5721)	18270	(5354)	17020	(4988)	15790	(4628)	14570	(4270)
	-5	(-20.6)	19870	(5823)	18710	(5483)	17570	(5149)	16420	(4812)	15280	(4478)	14160	(4150)	13060	(3828)
Compressor	-10	(-23.3)	17780	(5211)	16730	(4903)	15680	(4595)	14640	(4291)	13610	(3989)	12590	(3690)	11580	(3394)
Model	-15	(-26.1)	15770	(4622)	14830	(4346)	13870	(4065)	12930	(3789)	11980	(3511)	11060	(3241)	10150	(2975)
CF12K6E	-20	(-28.9)	13860	(4062)	12990	(3807)	12130	(3555)	11270	(3303)	10410	(3051)	9570	(2805)	8750	(2564)
	-25	(-31.7)	12010	(3520)	11220	(3288)	10440	(3060)	9650	(2828)	8860	(2597)	8100	(2374)	7350	(2154)
	-30	(-34.4)	10240	(3001)	9510	(2787)	8790	(2576)	8050	(2359)	7340	(2151)	6640	(1946)	5940	(1741)

ELECTRICAL DATA
COPELAND MODELS

WITH STANDARD EC FAN MOTOR

MODEL KQH		COMPRESSOR MODEL NO.	POWER SUPPLY	COMPRESSOR		*EC CONDENSER FAN MOTOR*			UNIT	
				RLA	LRA	QTY	WATTS	FLA	MCA	MOP
KQHA015H7-H	S2A	CR18K6E-PFV	208-230/1/60	9.4	49	1	165	1.7	13.5	20
	T3A	CR18K6E-TF5	208-230/3/60	5.4	49	1	165	1.7	8.5	15
KQHA020H7-H	S2A	CR24K6E-PFV	208-230/1/60	11.2	61	1	165	1.7	15.7	25
	T3A	CR24K6E-TF5	208-230/3/60	6.9	55	1	165	1.7	10.3	15
	T4A	CR24K6E-TFD	460/3/60	3.6	28	1	165	0.9	5.4	15
KQHA025H7-H	S2A	CR32K6E-PFV	208-230/1/60	14.4	82	1	165	1.7	19.7	30
	T3A	CR32K6E-TF5	208-230/3/60	9.0	72	1	165	1.7	13.0	20
	T4A	CR32K6E-TFD	460/3/60	4.6	33	1	165	0.9	6.6	15
KQHA030H7-H	S2A	CR38K6E-PFV	208-230/1/60	17.1	105	1	165	1.7	23.1	40
	T3A	CR38K6E-TF5	208-230/3/60	10.7	85	1	165	1.7	15.1	25
	T4A	CR38K6E-TFD	460/3/60	5.3	42	1	165	0.9	7.5	15
KQHA035H7-H	S2A	CR42K6E-PFV	208-230/1/60	18.3	102	2	330	3.4	26.3	40
	T3A	CR42K6E-TF5	208-230/3/60	12.6	91	2	330	3.4	19.2	30
	T4A	CR42K6E-TFD	460/3/60	5.7	42	2	330	1.8	8.9	15
KQHA040H7-H	S2A	CR53KQE-PFV	208-230/1/60	26.0	140	2	330	1.7	35.9	60
	T3A	CR53KQE-TF5	208-230/3/60	16.3	107	2	330	1.7	23.8	40
	T4A	CR53KQE-TFD	460/3/60	8.1	55	2	330	0.9	12.0	20
KQHA050H7-H	S2A	CRNQ-050E-PFV	208-230/1/60	30.8	142	2	330	1.7	41.9	70
	T3A	CRNQ-050E-TF5	208-230/3/60	19.2	130	2	330	1.7	27.4	40
	T4A	CRNQ-050E-TFD	460/3/60	8.7	65	2	330	0.9	12.6	20
KQHA006M8-H	S2A	RST45C1E-CAV	208-230/1/60	4.6	26.5	1	165	1.7	7.5	15
KQHA008M8-H	S2A	RST55C1E-CAV	208-230/1/60	6.1	33.7	1	165	1.7	9.3	15
KQHA009M8-H	S2A	RST64C1E-CAV	208-230/1/60	8.0	43.0	1	165	1.7	11.7	15
KQHA010M8-H	S2A	RST70C1E-PFV	208-230/1/60	6.9	46.0	1	165	1.7	10.3	15
	T3A	RST70C1E-TFC	208-230/3/60	4.9	36.0	1	165	1.7	7.8	15
KQHA011M8-H	S2A	RST80C1E-PFV	208-230/1/60	8.3	46.0	1	165	1.7	12.1	20
	T3A	RST80C1E-TA5	208-230/3/60	5.1	36.0	1	165	1.7	8.1	15
KQHA013M8-H	S2A	RST97C1E-PFV	208-230/1/60	9.0	51.0	1	165	1.7	13.0	20
	T3A	RST97C1E-TA5	208-230/3/60	5.4	36.0	1	165	1.7	8.5	15
KQHA015E6-H	S2A	CS10K6E-PFV	208-230/1/60	9.8	56	1	165	1.7	14.0	20
	T3A	CS10K6E-TF5	208-230/3/60	6.7	51	1	165	1.7	10.1	15
	T4A	CS10K6E-TFD	460/3/60	3.2	25	1	165	0.9	4.9	15
KQHA020E6-H	S2A	CS12K6E-PFV	208-230/1/60	9.8	56	1	165	1.7	14.0	20
	T3A	CS12K6E-TF5	208-230/3/60	6.7	51	1	165	1.7	10.1	15
KQHA025E6-H	S2A	CS14K6E-PFV	208-230/1/60	11.2	61	1	165	1.7	15.7	25
	T3A	CS14K6E-TF5	208-230/3/60	8.2	55	1	165	1.7	12.0	20
	T4A	CS14K6E-TFD	460/3/60	4.2	28	1	165	0.9	6.2	15
KQHA030E6-H	S2A	CS18K6E-PFV	208-230/1/60	14.4	82	1	165	1.7	19.6	30
	T3A	CS18K6E-TF5	208-230/3/60	7.9	65.5	1	165	1.7	11.6	15
	T4A	CS18K6E-TFD	460/3/60	4.2	33	1	165	0.9	6.2	15
KQHA035E6-H	S2A	CS20K6E-PFV	208-230/1/60	16.7	96	2	330	1.7	24.2	40
	T3A	CS20K6E-TF5	208-230/3/60	10.2	75	2	330	1.7	16.2	25
	T4A	CS20K6E-TFD	460/3/60	4.6	40	2	330	0.9	7.5	15
KQHA010L6-H	S2A	CF04K6E-PFV	208-230/1/60	9.9	59.2	1	165	1.7	14.1	20
	T3A	CF04K6E-TF5	208-230/3/60	6.1	52	1	165	1.7	9.3	15
KQHA020L6-H	S2A	CF06K6E-PFV	208-230/1/60	10.3	59.2	1	165	1.7	14.5	25
	T3A	CF06K6E-TF5	208-230/3/60	6.3	52	1	165	1.7	9.6	15
KQHA025L6-H	S2A	CF09K6E-PFV	208-230/1/60	15.0	87	1	165	1.7	20.5	35
	T3A	CF09K6E-TF5	208-230/3/60	9.2	72.2	1	165	1.7	13.2	20
	T4A	CF09K6E-TFD	460/3/60	4.9	35.8	1	165	0.9	7.1	15
KQHA030L6-H	S2A	CF12K6E-PFV	208-230/1/60	18.4	105	1	165	1.7	24.7	40
	T3A	CF12K6E-TF5	208-230/3/60	11.0	85	1	165	1.7	15.5	25
	T4A	CF12K6E-TFD	460/3/60	5.9	42	1	165	0.9	8.3	15

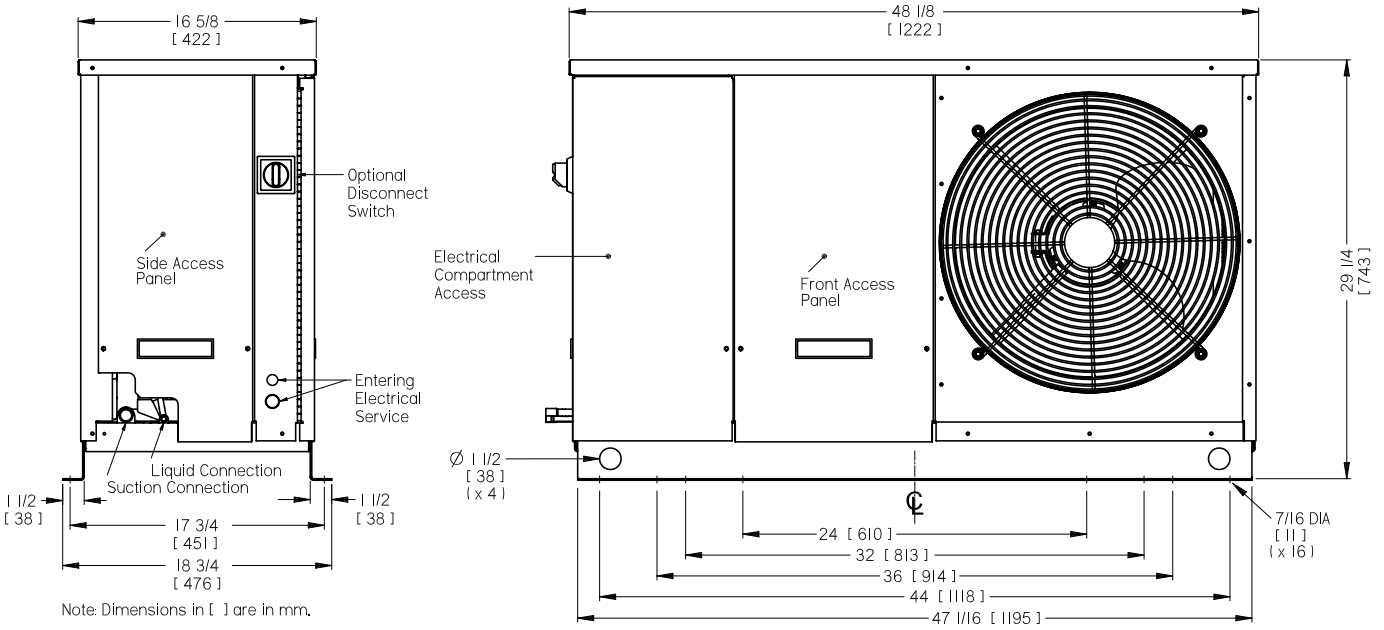
16 5/8
[422]
Optional
Disconnect
Switch
Side Access
Panel
Entering
Electrical
Service
Liquid Connection
Suction Connection
1 1/2
[38]
17 3/4
[451]
18 3/4
[476]
1 1/2
[38]
Note: Dimensions in [ ] are in mm.
48 1/8
[1222]
Electrical
Compartment
Access
Front Access
Panel
29 1/4
[743]
Ø 1 1/2
[38]
(x 4)
7/16 DIA
[11]
(x 16)
24 [610]
32 [813]
36 [914]
44 [1118]
47 1/16 [1195]

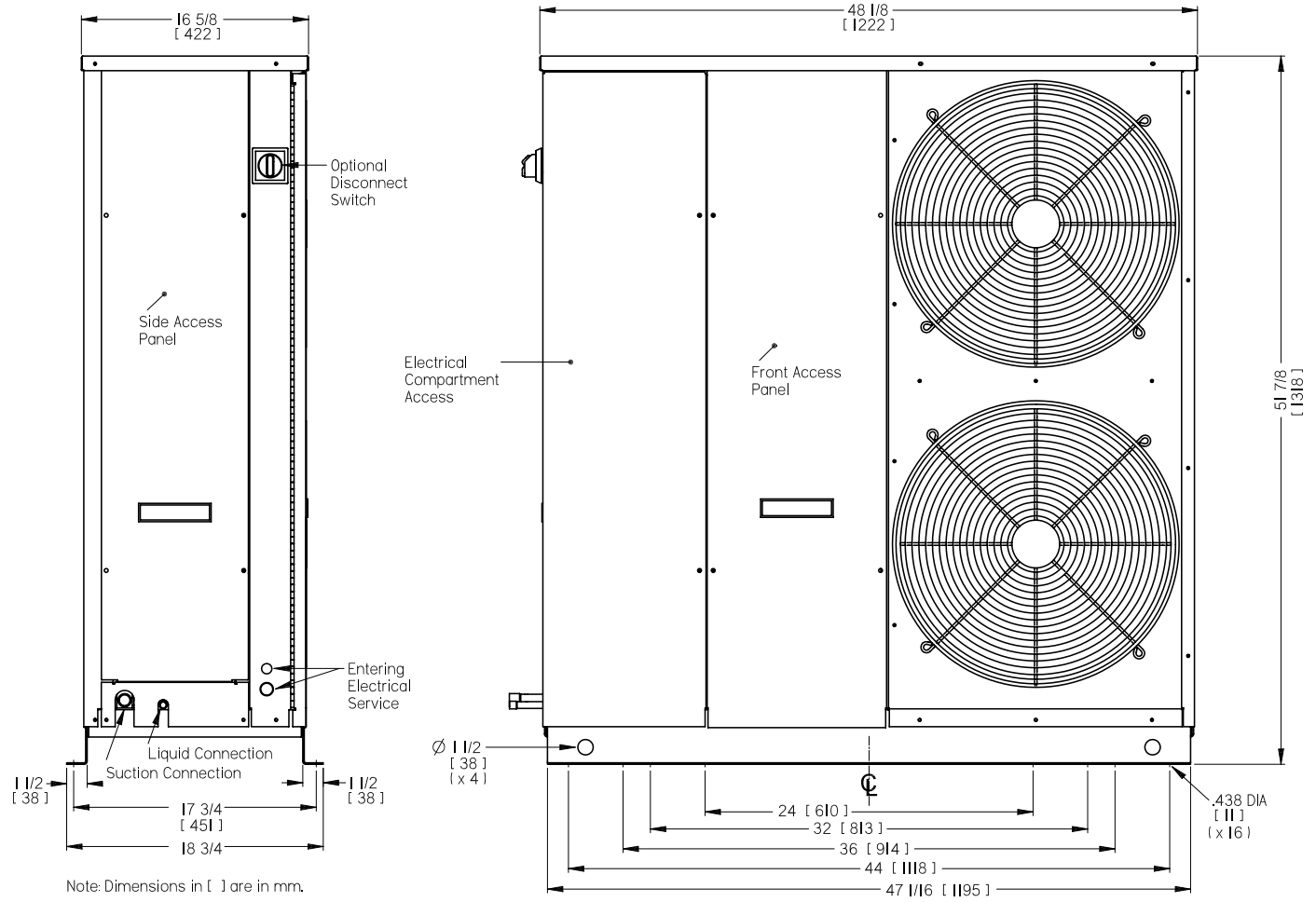
16 5/8
[422]
Optional
Disconnect
Switch
Side Access
Panel
Entering
Electrical
Service
Liquid Connection
Suction Connection
1 1/2
[38]
17 3/4
[451]
18 3/4
1 1/2
[38]
Note: Dimensions in [ ] are in mm.
48 1/8
[1222]
Electrical
Compartment
Access
Front Access
Panel
51 7/8
[1318]
Ø 1 1/2
[38]
(x 4)
.438 DIA
[11]
(x 16)
24 [610]
32 [813]
36 [914]
44 [1118]
47 1/16 [1195]

DIMENSIONAL DATA - OPTIONAL WIND GUARD

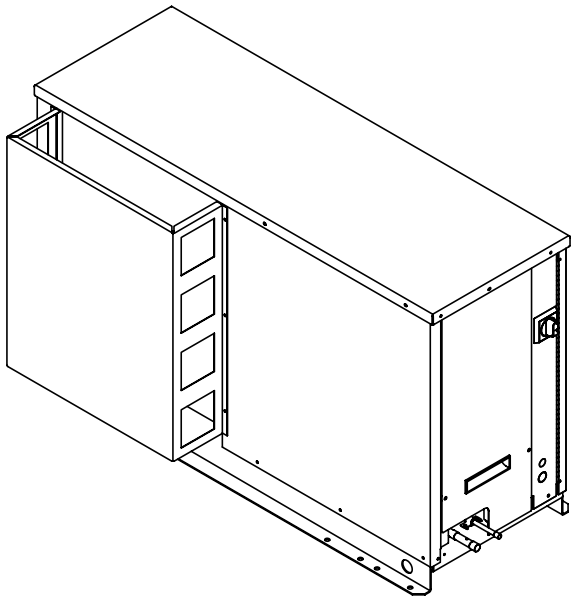

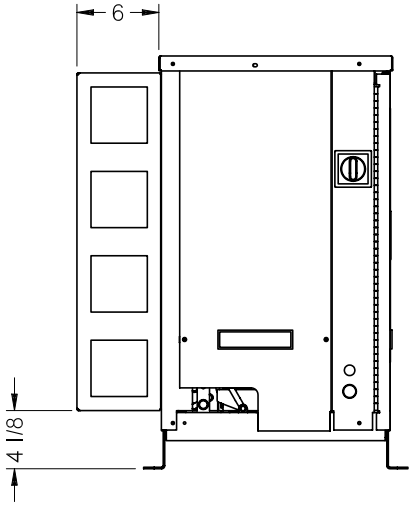

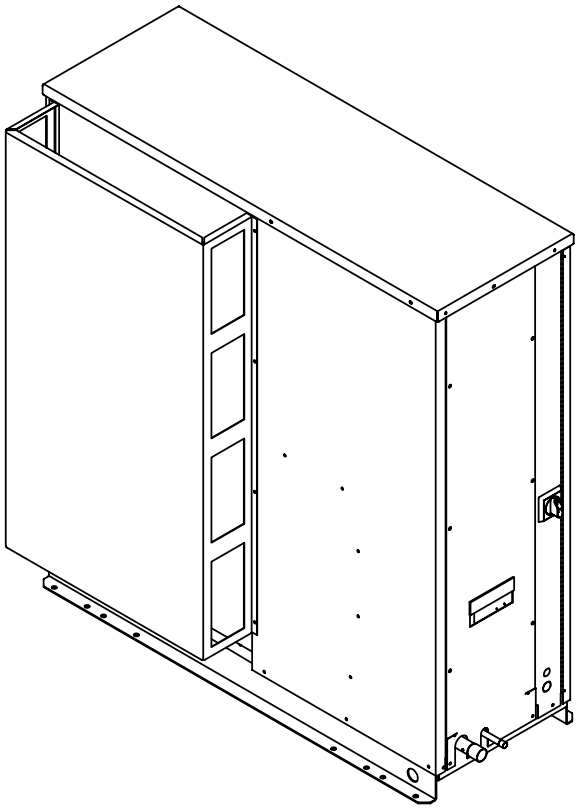

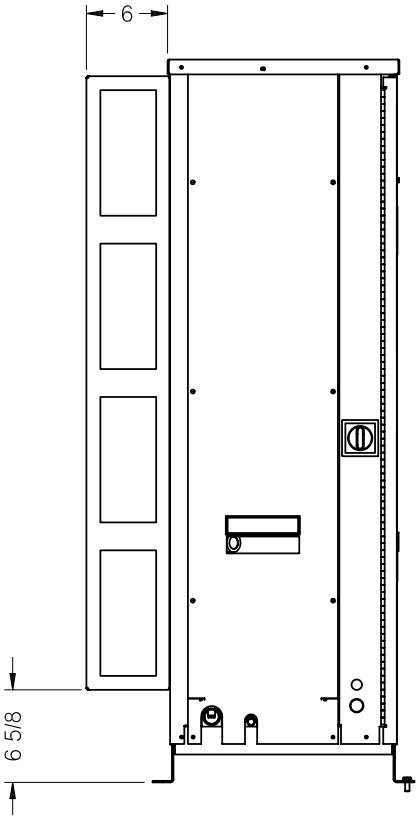

SPECIFICATIONS
COPELAND MODELS

MODEL	UNIT CONNECTIONS				R404A RECEIVER CAPACITY 90% FULL *		APPROX. SHIPPING WEIGHT	
	SUCTION (OD)		LIQUID (OD)					
KQH	Inches	*mm*	Inches	*mm*	Lbs.	*Kgs*	Lbs.	*Kgs*
KQHA015H7	5/8	*16*	3/8	*10*	12	*5.4*	315	*143*
KQHA020H7	5/8	*16*	3/8	*10*	12	*5.4*	315	*143*
KQHA025H7	7/8	*22*	3/8	*10*	15	*6.9*	315	*143*
KQHA030H7	7/8	*22*	1/2	*13*	15	*6.8*	315	*143*
KQHA035H7	7/8	*22*	1/2	*13*	22	*9.8*	480	*218*
KQHA040H7	1 1/8	*29*	1/2	*13*	22	*9.8*	500	*227*
KQHA050H7	1 1/8	*29*	1/2	*13*	22	*9.8*	520	*236*
KQHA006M8	5/8	*16*	3/8	*10*	11	*5*	305	*139*
KQHA008M8	5/8	*16*	3/8	*10*	11	*5*	305	*139*
KQHA009M8	5/8	*16*	3/8	*10*	11	*5*	305	*139*
KQHA010M8	5/8	*16*	3/8	*10*	11	*5*	315	*143*
KQHA011M8	5/8	*16*	3/8	*10*	11	*5*	315	*143*
KQHA013M8	5/8	*16*	3/8	*10*	11	*5*	315	*143*
KQHA015E6	5/8	*16*	3/8	*10*	11	*5*	315	*143*
KQHA020E6	5/8	*16*	3/8	*10*	11	*5*	315	*143*
KQHA025E6	7/8	*22*	1/2	*13*	14	*6.4*	315	*143*
KQHA030E6	7/8	*22*	1/2	*13*	14	*6.4*	315	*143*
KQHA035E6	7/8	*22*	1/2	*13*	20	*8.9*	480	*218*
KQHA010L6	5/8	*16*	3/8	*10*	11	*5*	320	*145*
KQHA020L6	7/8	*22*	3/8	*10*	11	*5*	320	*145*
KQHA025L6	7/8	*22*	1/2	*13*	14	*6.4*	330	*150*
KQHA030L6	7/8	*22*	1/2	*13*	14	*6.4*	330	*150*

*** NOTE ON ALTERNATE REFRIGERANTS:**

* PUBLISHED RECEIVER CAPACITY IS BASED ON **R404A** ON MODELS USING "8" AS REFRIGERANT CODE. FOR ALTERNATE REFRIGERANTS, MULTIPLY **R404A** VALUE BY THE APPROPRIATE VALUE BELOW:

R407A	R407C	R448A	R507	R22
1.10	1.10	1.05	1.00	1.15

- For R449A, use R448A data.

ANNUAL WALK-IN ENERGY FACTOR (AWEF) RATINGS FOR HIGH/MEDIUM TEMP. APPLICATIONS

BASE UNIT MODEL KQH	AWEF OUTDOOR MODELS
KQHA015H7	8.50
KQHA020H7	8.81
KQHA025H7	8.79
KQHA030H7	8.90
KQHA035H7	9.28
KQHA040H7	8.56
KQHA050H7	8.20

BASE UNIT MODEL KQH	AWEF OUTDOOR MODELS
KQHA006M8	7.20
KQHA008M8	7.01
KQHA009M8	6.28
KQHA010M8	7.68
KQHA011M8	7.63
KQHA013M8	7.59
KQHA015E6	8.72
KQHA020E6	8.79
KQHA025E6	8.50
KQHA030E6	8.64
KQHA035E6	8.80

SOUND PRESSURE LEVELS

COPELAND MODEL KQH	dBA @ 10 ft. with Sound Insulated Compressor Compartment	dBA @ 10 ft. *without* Sound Insulated Compressor Compartment
KQHA015H7	58	61
KQHA020H7	58	61
KQHA025H7	58	61
KQHA030H7	60	63
KQHA035H7	60	62
KQHA040H7	60	62
KQHA050H7	60	62
KQHA006M8	58	61
KQHA008M8	58	61
KQHA009M8	58	61
KQHA010M8	58	61
KQHA011M8	58	61
KQHA013M8	58	61
KQHA015E6	58	61
KQHA020E6	60	63
KQHA025E6	59	62
KQHA030E6	60	63
KQHA035E6	60	62
KQHA010L6	55	58
KQHA020L6	56	59
KQHA025L6	57	60
KQHA030L6	57	60

- Data is typical of "free field" conditions. Factors such as reflecting wall, background noise and installation may have significant influence on data

- Testing performed according to AHRI Standard 270

- For more accurate ratings refer to AHRI Standard 275 for correction factors due to reflecting planes

- Data is for 100% fan speed. Further sound reductions of approx. 4-6 dBA can be expected at ambients below 70°F

TYPICAL UNIT WIRING DIAGRAM - 230/1/60 - STANDARD EC FAN MOTOR

EC MOTORS 60Hz

CONDENSING UNIT WIRING DIAGRAM

- 208/230V–1–60 or 200/220V–1–50 Hz.
- INHERENT LINE BREAK MOTOR PROTECTION
- WITH McMill. EC COND FAN MOTOR & 450CPW JOHNSON CONTROLLER

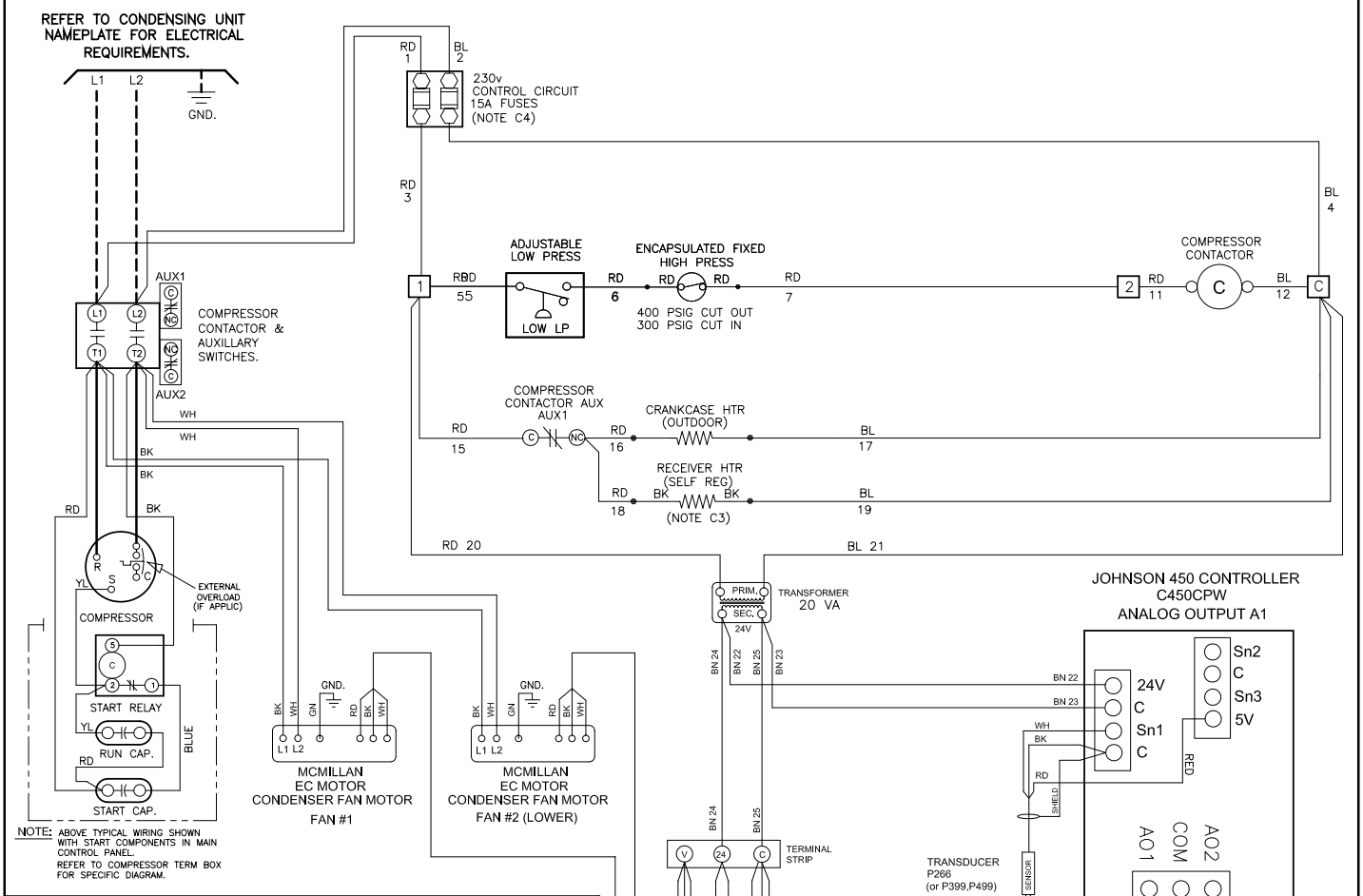

C450CQN-4C CONTROL DISPLAY/BUTTONS

- DISPLAY DEFAULTS TO READ SENSOR Sn1, Sn2 and Sn3 CONDITIONS
- PUSH ▷ TO TOGGLE THRU AND VIEW INPUT and OUTPUT CONDITIONS
- ACTIVATE PROGRAM BUTTONS BY HOLDING △ & ▽ TOGETHER FOR 5 SECONDS
  - - - - SENS IS THEN DISPLAYED AND AVAIL FOR ADJUSTMENTS
  DISPLAY RETURNS TO DEFAULT MODE AFTER TWO MINUTES OF INACTIVITY.

▷ SELECTS PARTICULAR SENSOR AND OUTPUT

△ ▽ ADJUSTS THE VALUES WHEN FLASHING. ▷ ENTERS THE VALUE.

M MENU BUTTON TOGGLES BETWEEN SENSOR, OUTPUT ANALOG and OUTPUT RELAY(S), PROGRAMMING GROUPS.

CONTROL SETPOINTS

PRESS M TO SELECT REQUIRED GROUP

THEN TOGGLE THRU WITH ▷ BUTTON FOR EACH SETTING

AND USE △ ▽ UP/DOWN FOR ADJUSTMENTS

SENS (SENSOR INPUTS)

Sn1 - HIGH SIDE PRESS TRANSDUCER Set for: P500
Sn2 - NOT USED Set for: --
Sn3 - NOT USED Set for: --
OFFS - Set for: 0

OUTA1 (OUTPUT ANALOG)

Used for Condenser EC fan motor speed control
Provides Analog 0-10V DC output:
(As Ambient temperature / cond press drops fan slows down)

PULS PULSE (HYBRID ANALOG)

Used for Improved condenser EC fan motor performance
LEV=22 (pulse output set at 22% of 10V output)
PER=2 (2 Second pulse period)

"OUTA1" IS FACTORY CONFIGURED FOR THE REQUIRED SYSTEM REFRIGERANT BELOW

R407A / R448A / R449A
SP=165 (Set point at 165psig./80°F Cond Temp)
EP=265 (End point at 265psig results in 100 psi throttle rangel)
OSP=0 (Output Signal 0% DC volts at SP setting
OEP=100 (Output End 100% DC volts at EP setting)
I-C = 4 (Integration Constant factor)
UP-R = 1 (Output Signal Update Rate = 1 Second)
bNd = 0 (Output Signal Deadband = 0% of OSP to OEP range)
SNF = ON (Sensor failure mode 10V DC Voltage)
SENS = Sn1 (Assigned Sn1 as controlling sensor)

FOR OTHER REFRIGERANT SETTINGS SEE SEPPARATE SET-UP SHEET. QSU-QCU-02

REFER TO SEPPARATE SHEET QSU-QCU-02 FOR CONTROL SET-UP PROCEDURE

NOTES

C1. USE COPPER CONDUCTORS ONLY
C2. USE 75°C WIRE (OR HIGHER)
C3. OPTIONAL COMPONENT
C4. ALL FUSES TO BE CLASS CC OR J AND VOLTAGE RATED EQUAL (OR HIGHER) THAN OPERATING VOLTAGE

CONDUCTORS/WIRING
——— FACTORY WIRING
— — — — OPTIONAL WIRING
– – – – WIRING BY OTHERS

ALL FIELD WIRING MUST BE DONE IN COMPLIANCE WITH ALL APPLICABLE LOCAL AND NATIONAL CODES.

REVISIONS			DIAGRAM NUMBER
DATE	BY	LTR	S2Q1W6
SEPT 12/17	BG	A	

TYPICAL UNIT WIRING DIAGRAM - 230/3/60 - STANDARD EC FAN MOTOR

EC MOTORS 60Hz

CONDENSING UNIT WIRING DIAGRAM

- 208–230V–3–60, or 200/220V–3–50 Hz
- INHERENT LINE BREAK MOTOR PROTECTION
- WITH McMill. EC COND FAN MOTOR & 450CPW JOHNSON CONTROLLER

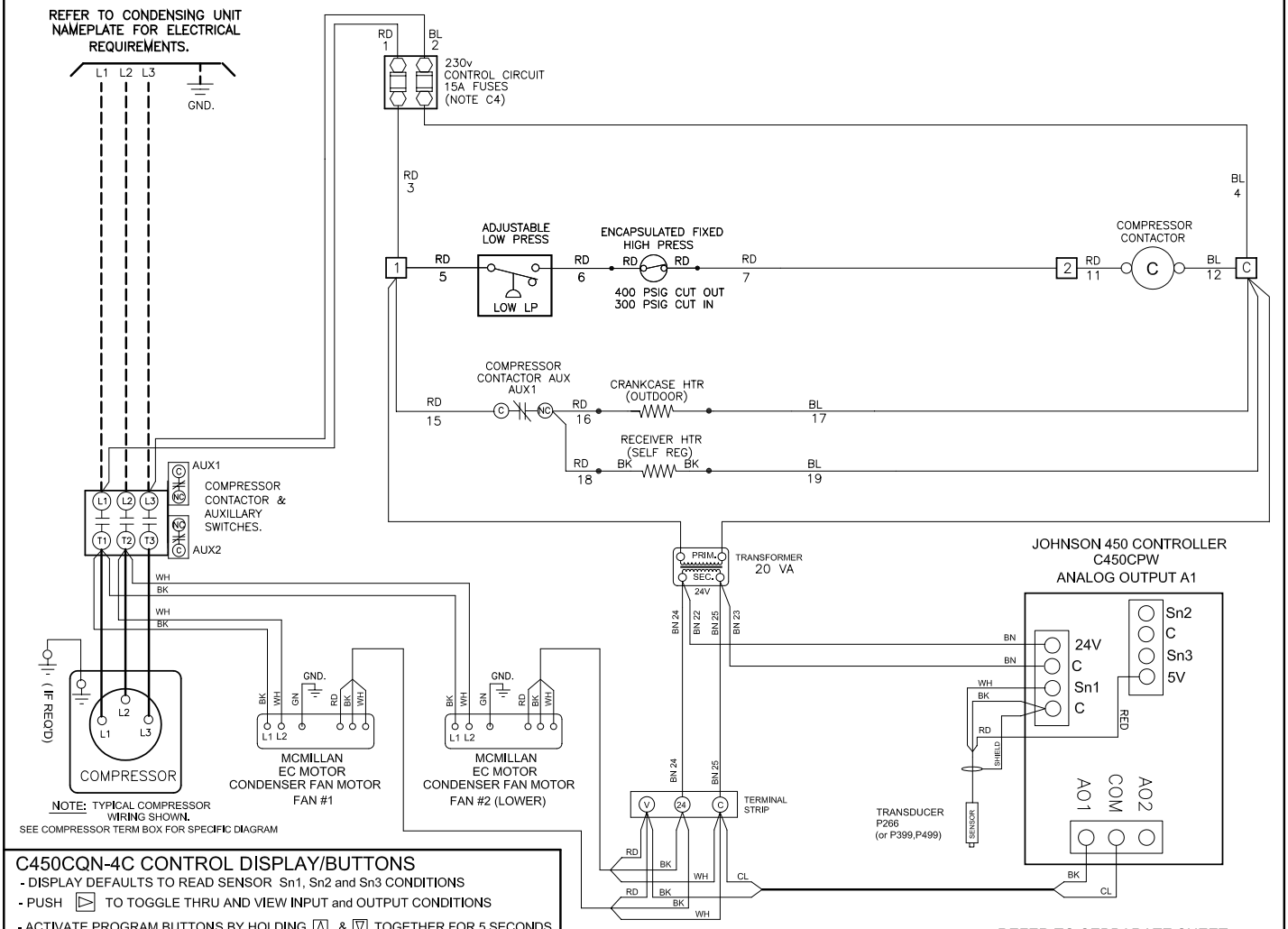

C450CQN-4C CONTROL DISPLAY/BUTTONS

- DISPLAY DEFAULTS TO READ SENSOR Sn1, Sn2 and Sn3 CONDITIONS
- PUSH ▷ TO TOGGLE THRU AND VIEW INPUT and OUTPUT CONDITIONS
- ACTIVATE PROGRAM BUTTONS BY HOLDING △ & ▽ TOGETHER FOR 5 SECONDS
  - - - - SENS IS THEN DISPLAYED AND AVAIL FOR ADJUSTMENTS
  DISPLAY RETURNS TO DEFAULT MODE AFTER TWO MINUTES OF INACTIVITY.

▷ SELECTS PARTICULAR SENSOR AND OUTPUT

△ ▽ ADJUSTS THE VALUES WHEN FLASHING. ▷ ENTERS THE VALUE.

M MENU BUTTON TOGGLES BETWEEN SENSOR, OUTPUT ANALOG and OUTPUT RELAY(S), PROGRAMMING GROUPS.

CONTROL SETPOINTS

PRESS M TO SELECT REQUIRED GROUP

THEN TOGGLE THRU WITH ▷ BUTTON FOR EACH SETTING

AND USE △ ▽ UP/DOWN FOR ADJUSTMENTS

SENS (SENSOR INPUTS)

Sn1 - HIGH SIDE PRESS TRANSDUCER
Set for: P500

Sn2 - NOT USED
Set for: --

Sn3 - NOT USED
Set for: --

OFFS - Set for: 0

OUTA1 (OUTPUT ANALOG)

Used for Condenser EC fan motor speed control
Provides Analog 0-10V DC output:
(As Ambient temperature / cond press drops fan slows down)

PULS PULSE (HYBRID ANALOG)

Used for improved condenser EC fan motor performance
LEV=22 (pulse output set at 22% of 10V output)
PER=2 (2 Second pulse period)

"OUTA1" IS FACTORY CONFIGURED FOR THE REQUIRED SYSTEM REFRIGERANT BELOW

R407A / R448A / R449A

SP=165 (Set point at 165psig./80°F Cond Temp)
EP=265 (End point at 265psig results in 100 psi throttle rangel)
OSP=0 (Output Signal 0% DC volts at SP setting
OEP=100 (Output End 100% DC volts at EP setting)
I-C = 4 (Integration Constant factor)
UP-R = 1 (Output Signal Update Rate = 1 Second)
bNd = 0 (Output Signal Deadband = 0% of OSP to OEP range)
SNF = ON (Sensor failure mode 10V DC Voltage)
SENS = Sn1 (Assigned Sn1 as controlling sensor)

FOR OTHER REFRIGERANT SETTINGS SEE SEPPARATE SET-UP SHEET. QSU-QCU-02

REFER TO SEPPARATE SHEET
QSU-QCU-02
FOR CONTROL SET-UP PROCEDURE

NOTES

C1. USE COPPER CONDUCTORS ONLY
C2. USE 75°C WIRE (OR HIGHER)
C3. OPTIONAL COMPONENT
C4. ALL FUSES TO BE CLASS CC OR J AND VOLTAGE RATED EQUAL (OR HIGHER) THAN OPERATING VOLTAGE

CONDUCTORS/WIRING
——— FACTORY WIRING
– – – – OPTIONAL WIRING
– – – – WIRING BY OTHERS

ALL FIELD WIRING MUST BE DONE IN COMPLIANCE WITH ALL APPLICABLE LOCAL AND NATIONAL CODES.

REVISIONS			DIAGRAM NUMBER
DATE	BY	LTR	
		B	T3Q1W6
SEPT 12/17	BG	A	

TYPICAL UNIT WIRING DIAGRAM - 460/3/60 - STANDARD EC FAN MOTOR

CONDENSING UNIT WIRING DIAGRAM

- 460V-3-60, or 380/400V-3-50 Hz
- INHERENT LINE BREAK MOTOR PROTECTION
- WITH McMill. EC COND FAN MOTOR & 450CPW JOHNSON CONTROLLER

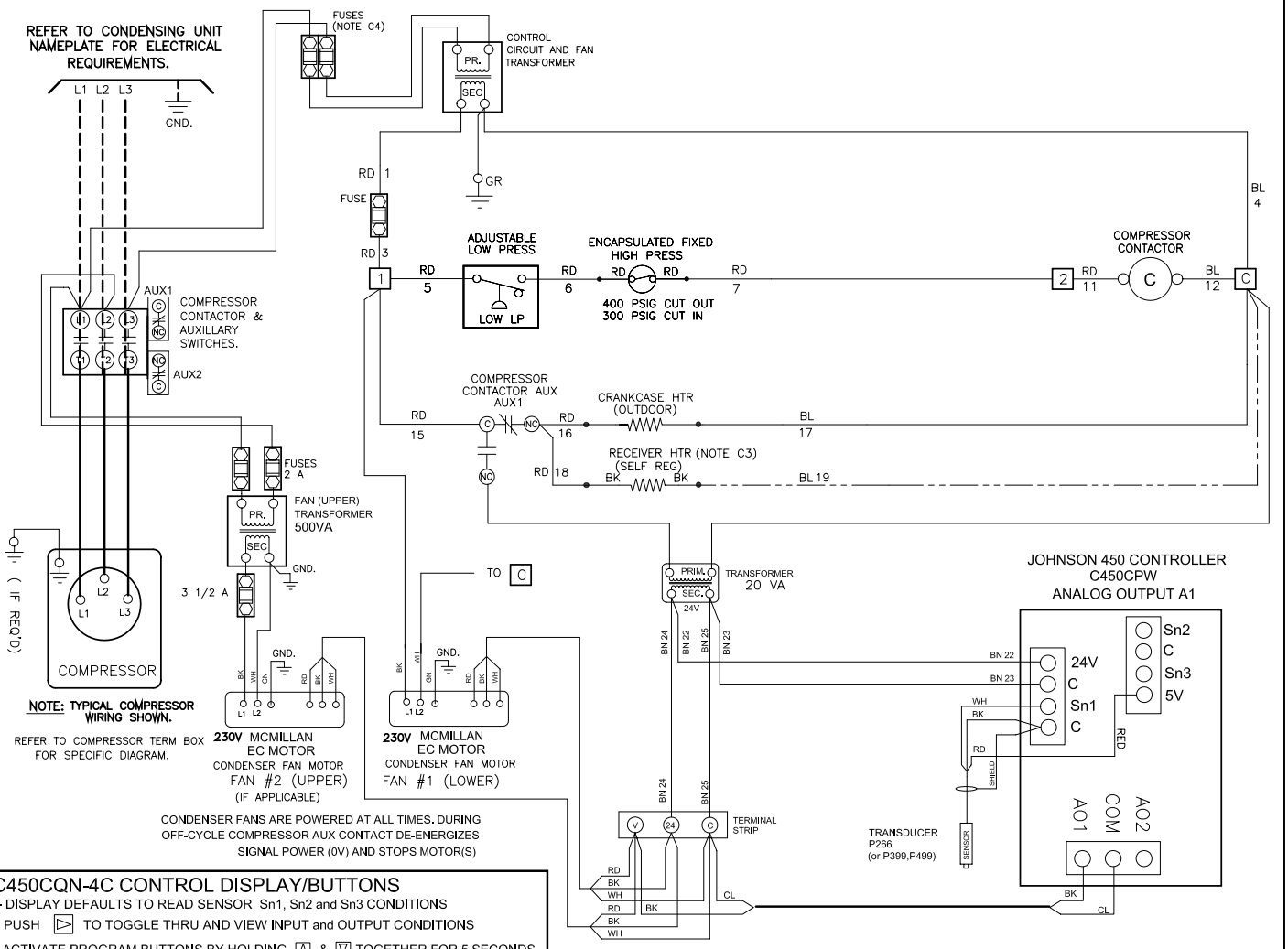

C450CQN-4C CONTROL DISPLAY/BUTTONS

- DISPLAY DEFAULTS TO READ SENSOR Sn1, Sn2 and Sn3 CONDITIONS
- PUSH ▷ TO TOGGLE THRU AND VIEW INPUT and OUTPUT CONDITIONS
- ACTIVATE PROGRAM BUTTONS BY HOLDING △ & ▽ TOGETHER FOR 5 SECONDS
  - - - - SENS IS THEN DISPLAYED AND AVAIL FOR ADJUSTMENTS
  DISPLAY RETURNS TO DEFAULT MODE AFTER TWO MINUTES OF INACTIVITY.

▷ SELECTS PARTICULAR SENSOR AND OUTPUT

△ ▽ ADJUSTS THE VALUES WHEN FLASHING. ▷ ENTERS THE VALUE.

M MENU BUTTON TOGGLES BETWEEN SENSOR, OUTPUT ANALOG and OUTPUT RELAY(S), PROGRAMMING GROUPS.

CONTROL SETPOINTS

PRESS M TO SELECT REQUIRED GROUP

THEN TOGGLE THRU WITH ▷ BUTTON FOR EACH SETTING

AND USE △ ▽ UP/DOWN FOR ADJUSTMENTS

SENS (SENSOR INPUTS)

Sn1 - HIGH SIDE PRESS TRANSDUCER Set for: P500

Sn2 - NOT USED Set for: –

Sn3 - NOT USED Set for: –

OFFS - Set for: 0

OUTA1 (OUTPUT ANALOG)

Used for Condenser EC fan motor speed control
Provides Analog 0-10V DC output:
(As Ambient temperature / cond press drops fan slows down)

PULS PULSE (HYBRID ANALOG)

Used for improved condenser EC fan motor performance
LEV=22 (pulse output set at 22% of 10V output)
PER=2 (2 Second pulse period)

"OUTA1" IS FACTORY CONFIGURED FOR THE REQUIRED SYSTEM REFRIGERANT BELOW

R407A / R448A / R449A

SP=165 (Set point at 165psig./80°F Cond Temp)
EP=265 (End point at 265psig results in 100 psi throttle rangel)
OSP=0 (Output Signal 0% DC volts at SP setting
OEP=100 (Output End 100% DC volts at EP setting)
I-C = 4 (Integration Constant factor)
UP-R = 1 (Output Signal Update Rate = 1 Second)
bNd = 0 (Output Signal Deadband = 0% of OSP to OEP range)
SNF = ON (Sensor failure mode 10V DC Voltage)
SENS = Sn1 (Assigned Sn1 as controlling sensor)

FOR OTHER REFRIGERANT SETTINGS SEE SEPPARATE SET-UP SHEET. QSU-QCU-02

REFER TO SEPPARATE SHEET QSU-QCU-02 FOR CONTROL SET-UP PROCEDURE

NOTES

C1. USE COPPER CONDUCTORS ONLY
C2. USE 75°C WIRE (OR HIGHER)
C3. OPTIONAL COMPONENT
C4. ALL FUSES TO BE CLASS CC OR J AND VOLTAGE RATED EQUAL (OR HIGHER) THAN OPERATING VOLTAGE

CONDUCTORS/WIRING

——— FACTORY WIRING
— — — OPTIONAL WIRING
— — — — WIRING BY OTHERS

ALL FIELD WIRING MUST BE DONE IN COMPLIANCE WITH ALL APPLICABLE LOCAL AND NATIONAL CODES.

REVISIONS			DIAGRAM NUMBER
DATE	BY	LTR	T4Q1W6
SEPT 12/17	BM	A	

OPTIONAL WALL MOUNT INSTRUCTIONS

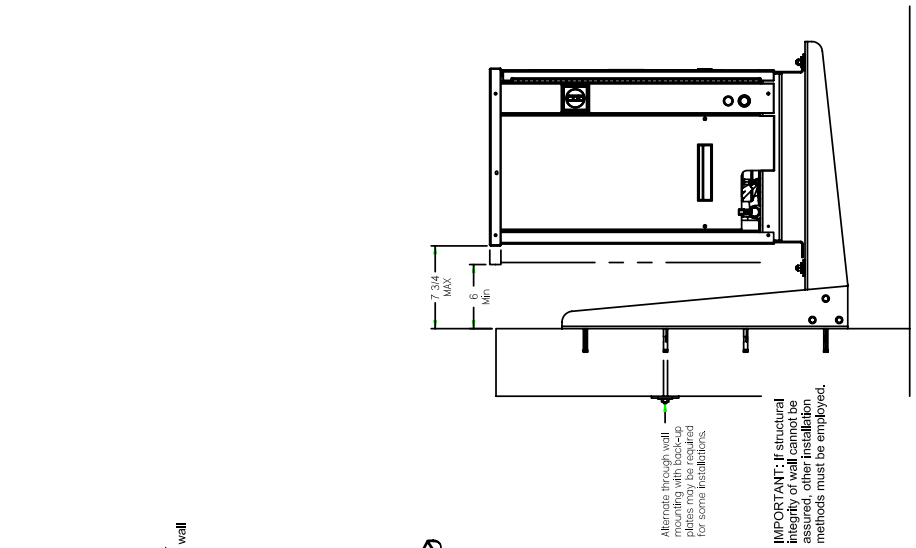

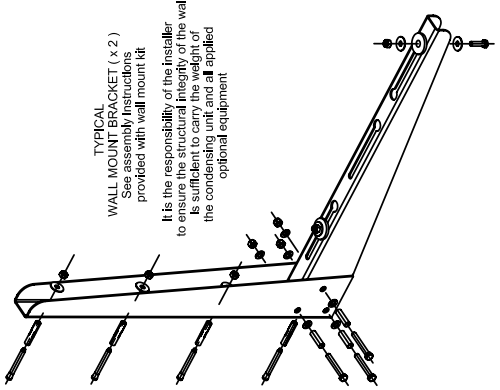

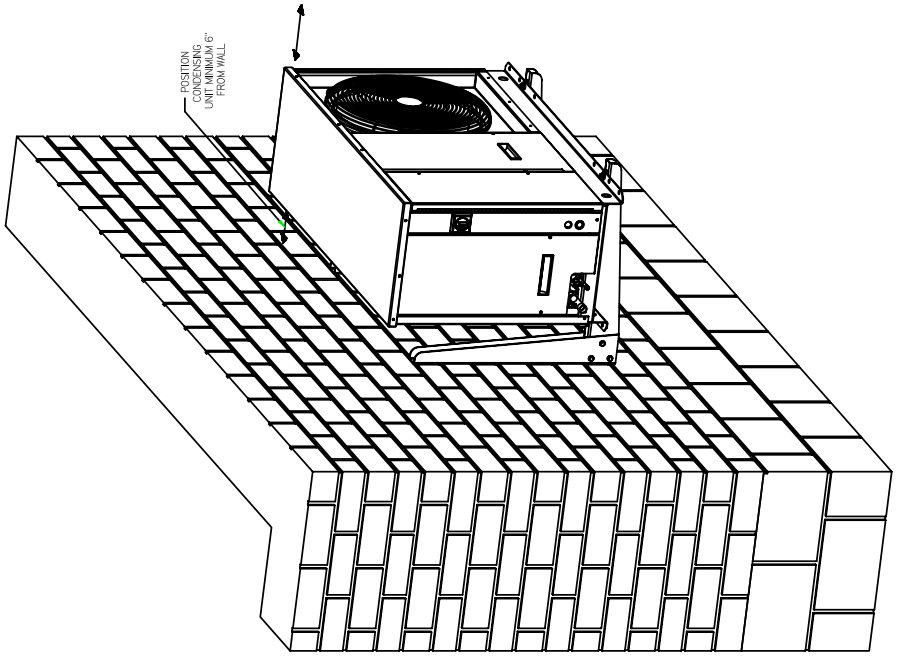

PROJECT INFORMATION

System	
Model Number	Date of Start-Up
Serial Number	Service Contractor
Refrigerant	Phone
Electrical Supply	E-Mail

KQH

PRODUCT SUPPORT RESOURCES

60Hz

PRODUCT SUPPORT	*web:* **k-rp.com/kqh** *email:* **smcu@k-rp.com** *call:* **1-844-893-3222 x521**
TROUBLESHOOTING	*email:* **troubleshooting@k-rp.com** *call:* **1-844-893-3222 x529**
SERVICE PARTS	*web:* **k-rp.com/parts** *email:* **parts@k-rp.com** *call:* **1-844-893-3222 x521**
WARRANTY	*web:* **k-rp.com/warranty** *email:* **warranty@k-rp.com** *call:* **1-844-893-3222 x501**
ORDERS	*email:* **orders@k-rp.com** *call:* **1-844-893-3222 x501**
SHIPPING	*email:* **shipping@k-rp.com** *call:* **1-844-893-3222 x503**

KeepRite® REFRIGERATION

KeepRite Refrigeration
Brantford, ON • Longview, TX
1-800-463-9517 info@k-rp.com www.k-rp.com

c UL us

Due to the manufacturer's policy of continuous product improvement, we reserve the right to make changes without notice.